METALWORKING

HYDRO-GRIP

Hydraulic high precision toolholders

2025

ETP HYDRO-GRIP
Hydraulic high precision toolholders

HYDRO-GRIP high precision tool holders are your guarantee of secure clamping for milling, drilling and reaming tools. Their unique strength provides precision and rigid-tool stability to improve machining performance for the largest number of applications. With the extensive range of HYDRO-GRIP® high precision toolholders all application areas, from finishing to heavy roughing, is covered. Bore diameters 6 – 32 mm available.

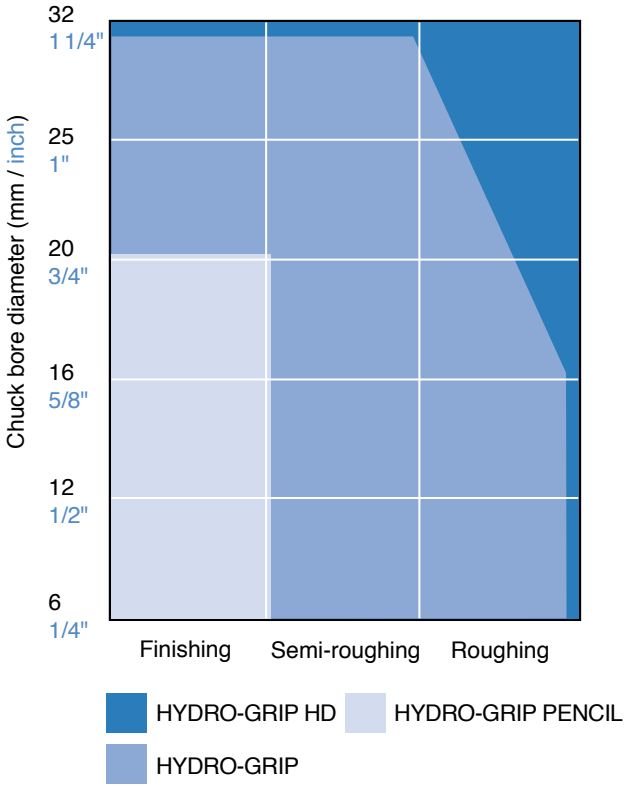

BENEFITS & FEATURES

- Easy handling and tool change
- Minimum tool run-out ensures good surface and extends tool life
- High speed capability
- Dampens noise and vibration
- Length pre-setting possible to save time

About ETP Transmission AB

ETP Transmission AB, after being in business for more than 50 years, has successfully developed products for 3 business or application areas.
• Metalworking • Woodworking
• Power Transmission under the registered trademarks ETP® and ETP HYDRO-GRIP®.

ETP Transmission AB
– leader in hydraulic clamping and centering products

Our business concept and all products are based upon the hydraulic principle. The ETP high precision products offer quick assembly and disassembly. With other words, you can fit your tools or components quick, easy and precise and run at high speeds. Within a few seconds you achieve perfect centering and fastening, simply by tightening of only one screw. Saving you time and money.

We are a global company and our customers are the leaders within their segments.
This is the way we like it, working with companies that expect the absolute best from us.
Your challenges drive us forward!

Key to symbols

Easy mounting with torque wrench

High clamping force

High runout accuracy

Vibration damping

Fast set-up time

Table of content

	Page
The basic design	4
Product overview - ETP HYDRO-GRIP Family	5
Product overview - Assortment	6
Product overview - Area of application	7
Product overview - ETP HYDRO-GRIP Family	8-11
HSK	12-21
ISO	22-26
BT and Dual Contact	27-34
CAT and Dual Contact	35-41
PSK	42-46
Cylindrical extension	47
ECOGRIP ER - For outer threaded toolholders and driven tools	48
ECOGRIP ER - For inner threaded driven tools	49
Accessories	
– Reduction Sleeves	50-52

Industry segments

ETP HYDRO-GRIP has for many years enabled high quality machining within industry segment with high quality demands, such as: Aerospace, Automotive, Die & Mould, General Machining, Medical, Oil & Gas.

The basic design: ETP HYDRO-GRIP - Hydraulic high precision toolholder

Toolholder shank:
ETP HYDRO-GRIP is available in a large assortment of different machine interface shanks:

PSK – C3, C4, C5, C6, C8
HSK – 32, 40, 50, 63, 100
ISO – 40, 50
BT – 30, 40, 50
CAT – 40, 50

Pressure system:
Pressure screw and piston with sealing system.
- Optimised for thousands of pressure settings.
- Low tightening torque (6 or 10 Nm)
- Easy handling

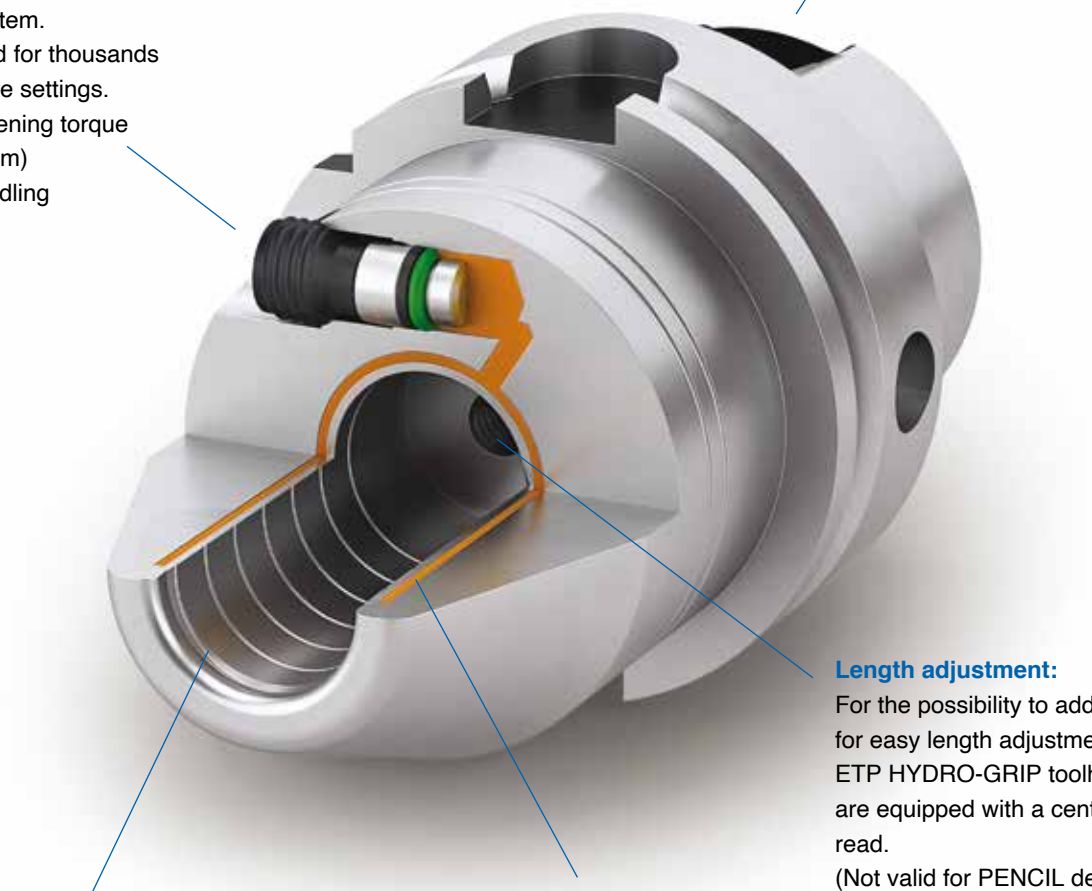

Length adjustment:
For the possibility to add screw for easy length adjustment ETP HYDRO-GRIP toolholders are equipped with a center thread.
(Not valid for PENCIL design).

The groove:
The integral spiral groove ensures any residual coolant on the tool to be removed from the contact surface when mounting the tool.
- Ensures high gripping force at any time

Pressure chamber:
- Secure clamping of any tool type.

A robust membrane and minimum amount of pressure media ensures a good temperature working range.

BENEFITS & FEATURES

- For drilling to semi-roughing
- High clamping force
- Easy handling
- Short overhang
- Modular design possibilityty

Product overview
ETP HYDRO-GRIP Family

ETP HYDRO-GRIP®
THE ORIGINAL

ETP HYDRO-GRIP® HD
HEAVY DUTY

ETP HYDRO-GRIP® SLENDER
SLENDER DESIGN

ETP HYDRO-GRIP® PENCIL
SLIM AND LONG REACH

ETP HYDRO-GRIP® S
GRINDING HOLDER

ETP ECOGRIP® ER
ADJUSTABLE HOLDER

Product overview
Assortment

The ETP HYDRO-GRIP high precision toolholders offers you the most complete advantages of any hydraulic holder available on the market today.
No other fastening technology than hydraulic clamping offers you the highest precision, in terms of tool life and higher surface quality, in combination with a total concept of easy handling and flexibility in design.
ETP combines easy handling and low maintenance with an extensive range!

Interfaces

	Toolholder	HSK Page 12-21	ISO Page 22-26	BT Page 27-34	CAT Page 35-41	PSK Page 42-46	ER Page 48-49
	ETP HYDRO-GRIP	HSK 32C HSK 40C HSK 50C HSK 63A/C HSK 100A/C	ISO 40 ISO 50	BT 40 BT 40/DC BT 50	CAT 40 CAT 40/DC CAT 50	PSK C3 PSK C4 PSK C5 PSK C6 PSKC8	
	ETP HYDRO-GRIP HD	HSK 63A/C HSK 100A/C	ISO 40 ISO 50	BT 40 BT 40/DC BT 50	CAT 40 CAT 40/DC CAT 50	PSK C5 PSK C6 PSK C8	
	ETP HYDRO-GRIP SLENDER	HSK 63F		BT 30 BT 30/DC BT 50	CAT 40 CAT 50		
	ETP HYDRO-GRIP PENCIL	HSK40E HSK 63A/C HSK 63F HSK 100A/C	ISO 40 ISO 50	BT 30 BT 30/DC BT 40 BT 40/DC BT 50	CAT 40 CAT 40/DC CAT 50	PSK C4 PSK C5 PSK C6 PSK C8	
	ETP HYDRO-GRIP S		ISO 50				
	ETP ECOGRIP ER						ER 16 ER 20 ER 25 ER 32 ER 40 ER 50

Product overview
Area of application

HYDRO-GRIP high precision toolholders are your guarantee of secure clamping for milling, drilling and reaming tools. Their unique strength provides precision and rigid-tool stability to improve machining performance for the largest number of applications. With the extensive range of HYDRO-GRIP high precision toolholders all application areas, from finishing to heavy roughing, is covered. Our wide selection of toolholders ensures that you find the right solution for almost any machining application. Regardless if it´s a high volume milling cutting operation, HYDRO-GRIP HD, or when machining difficult deep contours within the mold making industry, HYDRO-GRIP PENCIL. And don´t forget, all HYDRO-GRIP toolholders can be used with reduction sleeves, for maximum flexibility!

Toolholder	Finishing	Semi-Roughing	Roughing	Slot Milling	Plunging	Contour Milling	Trochoidal Milling	Drilling	Reaming	Tapping	Thread Milling
ETP HYDRO-GRIP	●	●			●	●		●	●	●	●
ETP HYDRO-GRIP HD	●	●	●	●	●	●	●	●	●	●	●
ETP HYDRO-GRIP SLENDER	●	●				●		●	●	●	●
ETP HYDRO-GRIP PENCIL	●				●	●		●	●		
ETP ECOGRIP ER	●	●			●			●	●		

ETP HYDRO-GRIP®

ETP HYDRO-GRIP® has a very compact and robust design. Tools changes are made quickly, easily and with a high level of precision. The high clamping force guarantees a secure clamping of your milling, drilling and reaming tools. With a minimum tool runout a good surface finish is achieved along with an extended tool life. In addition to our extensive standard range, ETP HYDRO-GRIP® can be made to your specific gauge line requirement, using our modular design possibility.

Hydraulic high precision toolholders

BENEFITS & FEATURES

- For drilling to semi-roughing
- High clamping force
- Easy handling
- Short overhang
- Modular design possibility

ETP HYDRO-GRIP® HD

ETP HYDRO-GRIP® HD, Heavy Duty, is the first hydraulic Power chuck available on the market. Here ETP combine all the positive benefits of hydraulic clamping, such as easy handling and precision, with an extreme high tool clamping force capability and rigid design. A high bending stiffness and the dampening properties of the hydraulic pressure media makes ETP HYDRO-GRIP® HD the ideal holder for any machining, from heavy rough milling to finishing.

Heavy Duty version. Up to 1670 Nm holding torque!

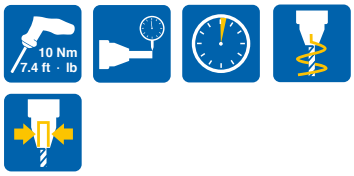

BENEFITS & FEATURES

- For rough milling to finishing
- Extreme high clamping force
- Easy handling
- Rigid design

ETP HYDRO-GRIP® CUSTOMIZED DESIGN

ETP HYDRO-GRIP toolholders can be made to your specific gauge line length requirement, using our modular design possibility.

Combine any machine shank available in our assortment, with any tool dimension (12 – 32 mm). With an intermediate sleeve, ETP offers you your customized toolholder to any required gauge length (up to 250 mm).

These customized toolholders offer the same rigid solid design, dampening properties and high runout precision as our standard assortment.

Design your own hydraulic precision toolholder - Online

customized.etp.se

BENEFITS & FEATURES

- Maximum flexibility in your design
- Choose your required gauge line length
- Radial length adjustment module possible

ETP HYDRO-GRIP® SLENDER

HYDRO-GRIP type SLENDER is extremely user friendly which means quick and easy tool changes. It has a tough and slender design.

Hydraulic high precision toolholders

BENEFITS & FEATURES

- Quick and easy tool change
- High performance
- Slender design
- Excellent runout

Hydraulic high precision toolholders – Pencil version

ETP HYDRO-GRIP® PENCIL

ETP HYDRO-GRIP® PENCIL is with its extreme slim design one of the most versatile holder on the market. An extensive range of standard dimensions and lengths optimizes your productivity when machining deep cavities and complex components.
ETP HYDRO-GRIP® PENCIL can also be made to your specific gauge line requirement, using our Customized Designs possibility.

BENEFITS & FEATURES

- For drilling to finishing
- Pencil design enabling machining in deep cavities and complex components
- Special designs possibility
- High clamping force

ETP HYDRO-GRIP® Grinding holder

We are happy to introduce our newest addition to the range of high quality hydraulic toolholders – HYDRO-GRIP Grinding holder.
With the combination of extreme high precision and easy handling and tool change a massive improvement in productivity can be reached. Quicker set-up times and improved repeat accuracy during sharpening of tools will save you time and money. The possibility to use reduction sleeves in the hydraulic holder also increases your flexibility.

BENEFITS & FEATURES

- High run-out accuracy ≤ 0,004 mm (≤ 0.00016 inch)
- Easy handling and tool change
- High clamping force
- Vibration dampening
- Flexibility in clamping range – use of reducing sleeves possible

Make your ER holder hydraulic and enjoy multiple benefits

ETP ECOGRIP™ ER

With the ETP ECOGRIP ER hydraulic sleeves you can easily turn your standard ER collet holder into a high precision hydraulic holder. Thus you can easily enjoy all the positive benefits of hydraulic clamping such as easy handling and precision, at an impressive competitive price level. This enables more users to benefit from decrease tool wear and increase productivity compared to using ER collet holders. With the use of the three axial screws an adjustability of the run-out is achieved.

BENEFITS & FEATURES

- **Turning ER holders hydraulic**
- **Easy handling and precision**
- **Adjustability of run-out**

ETP HYDRO-GRIP®
HSK Form A - DIN 69893

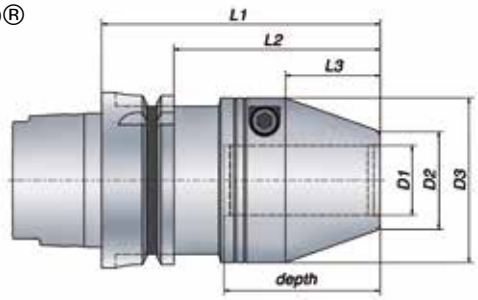

Metric range

Technical Specification *HSK Form A*

HSK size	Part no.	Item description	Dimensions, mm D1	D2	D3	L1	L2	L3	depth	T* Nm	Weight kg	G 2.5 at rpm
50	705875	HG-20/HSK50A	20	30	52	99	73	30	52	260 - 425	1.2	25 000
	706181	HG-32/HSK50A SD=66	32	42	69.5	109	83	38	60	820 - 1250	1.7	25 000
63	685630	HG-12/HSK63A	12	22	43.5	76	50	18	40	60 - 125	1.1	25 000
	685640	HG-12x100/HSK63A	12	22	43.5	100	74	18	40	60 - 125	1.4	25 000
	685650	HG-16/HSK63A	16	26	48	86	60	28	50	165 - 270	1.2	25 000
	685660	HG-16x125/HSK63A	16	20	48	125	99	28	50	165 - 270	1.8	25 000
	685670	HG-20/HSK63A	20	30	52	88	62	30	52	260 - 425	1.3	25 000
	685680	HG-20x150/HSK63A	20	30	52	150	124	30	52	260 - 425	2.3	25 000
	685690	HG-25/HSK63A	25	35	59	100	74	34	56	480 - 710	1.6	25 000
	685700	HG-25x150/HSK63A	25	35	59	150	124	34	56	480 - 710	2.7	25 000
	685710	HG-32/HSK63A	32	42	69.5	105	79	38	60	820 - 1250	2.0	25 000
100	685720	HG-12/HSK100A	12	22	43.5	79	50	18	40	60 - 125	2.4	14 000
	685730	HG-12x100/HSK100A	12	22	43.5	100	71	18	40	60 - 125	2.7	14 000
	685740	HG-16/HSK100A	16	26	48	89	60	28	50	165 - 270	2.6	14 000
	685750	HG-16x125/HSK100A	16	26	48	125	96	28	50	165 - 270	3.1	14 000
	685760	HG-20/HSK100A	20	30	52	91	62	30	52	260 - 425	2.7	14 000
	685770	HG-20x150/HSK100A	20	30	52	150	121	30	52	260 - 425	3.6	14 000
	685780	HG-25/HSK100A	25	35	59	95	66	34	56	480 - 710	2.9	14 000
	685790	HG-25x150/HSK100A	25	35	59	150	121	34	56	480 - 710	4.0	14 000
	685800	HG-32/HSK100A	32	42	69.5	99	70	38	60	820 - 1250	3.3	14 000

Inch range

Technical Specification *HSK Form A*

HSK size	Part no.	Item description	Dimensions, inch D1	D2	D3	L1	L2	L3	depth	T* ft·lb	Weight kg	G 2.5 at rpm
63	685630-T	HG-1/2”/HSK63A	0.500	0.866	1.713	2.992	1.969	0.709	1.575	55 - 105	1.1	25 000
	685640-T	HG-1/2”x100/HSK63A	0.500	0.866	1.713	3.937	2.913	0.709	1.575	55 - 105	1.4	25 000
	685670-T	HG-3/4”/HSK63A	0.750	1.181	2.047	3.465	2.441	1.181	2.047	192 - 314	1.3	25 000
	685680-T	HG-3/4”x150/HSK63A	0.750	1.181	2.047	5.906	4.882	1.181	2.047	192 - 314	2.3	25 000
	685690-T	HG-1”/HSK63A	1.000	1.378	2.323	3.937	2.913	1.339	2.205	354 - 524	1.6	25 000
	685700-T	HG-1”x150/HSK63A	1.000	1.378	2.323	5.906	4.882	1.339	2.205	354 - 524	2.7	25 000
	685710-T	HG-1 1/4”/HSK63A	1.250	1.654	2.736	4.134	3.110	1.496	2.362	605 - 922	2.0	25 000
100	685720-T	HG-1/2”/HSK100A	0.500	0.866	1.713	3.110	1.969	0.709	1.575	55 - 105	2.4	14 000
	685730-T	HG-1/2”x100/HSK100A	0.500	0.866	1.713	3.937	2.795	0.709	1.575	55 - 105	2.7	14 000
	685760-T	HG-3/4”/HSK100A	0.750	1.181	2.047	3.583	2.441	1.181	2.047	192 - 314	2.7	14 000
	685770-T	HG-3/4”x150/HSK100A	0.750	1.181	2.047	5.906	4.764	1.181	2.047	192 - 314	3.6	14 000
	685780-T	HG-1”/HSK100A	1.000	1.378	2.323	3.740	2.598	1.339	2.205	354 - 524	2.9	14 000
	685790-T	HG-1”x150/HSK100A	1.000	1.378	2.323	5.906	4.764	1.339	2.205	354 - 524	4.0	14 000
	685800-T	HG-1 1/4”/HSK100A	1.250	1.654	2.736	3.898	2.756	1.496	2.362	605 - 922	3.3	14 000

**) T = Min. and Max. transmittable torque using a h6 cylindrical tool, full depth insert. For additional information see section Technical Information.*

Information:
- Runout accuracy < 0.004 mm at 2.5 x D1 (max. 50 mm)
  ≤ 0.00016 inch at 2.5x D1 (max. 1.969 inch)
- Tool shank h6 or h7 can be used
- Center thread, Part no. S057-M8x1.25, for axial length adjustment screw (screw not included)
- Coolant through on all holders
- Bore for data carrier

Accessories:

Use preset Torque Wrench, 6 Nm, to ensure correct mounting of tools. Part no. 19050

ETP HYDRO-GRIP can be used with reducing sleeves.
For additional information see section Accessories.

ETP HYDRO-GRIP® HD
HSK Form A - DIN 69893

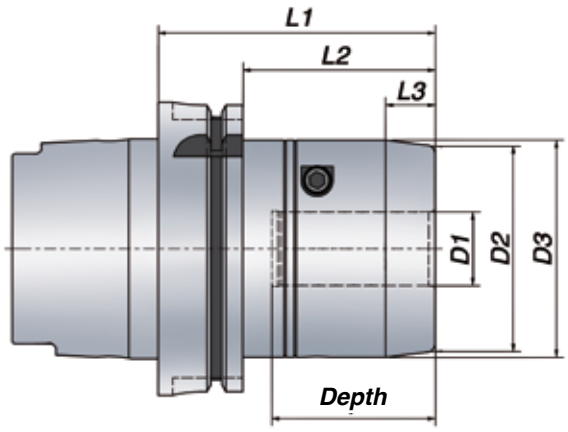

Metric range

Technical Specification *HSK Form A*

HSK size	Part no..	Item description	Dimensions, mm D1	D2	D3	L1	L2	L3	depth	T* Nm	Weight kg	G 2.5 at rpm
63	682150	HG HD-20/HSK63A	20	59	63	96	70	17	52	400 - 535	2.0	25 000
	705796	HG HD-25/HSK63A	25	70	74	101	75	17	56	740-940	2.7	25 000
100	682160	HG HD-20/HSK100A	20	59	63	91	62	17	52	400 - 535	3.3	14 000
	682170	HG HD-25/HSK100A	25	70	74	95	66	17	56	740 - 940	3.9	14 000
	682180	HG HD-32/HSK100A	32	76	80	99	70	17	60	1325 - 1670	4.2	14 000

Inch range

Technical Specification *HSK Form A*

HSK size	Part no..	Item description	Dimensions, mm D1	D2	D3	L1	L2	L3	depth	T* ft·lb	Weight kg	G 2.5 at rpm
63	682150-T	HG HD-3/4”/HSK63A	0.750	2.323	2.480	3.780	2.756	0.669	2.047	295 - 395	2.0	25 000
	705796-T	HG HD-1”/HSK63A	1.000	2.756	2.913	3.976	2.953	0.669	2.205	546-693	2.7	25 000
100	682160-T	HG HD-3/4”/HSK100A	0.750	2.323	2.480	3.583	2.441	0.669	2.047	295 - 395	3.3	14 000
	682170-T	HG HD-1”/HSK100A	1.000	2.756	2.913	3.740	2.598	0.669	2.205	546 - 693	3.9	14 000
	682180-T	HG HD-1 1/4”/HSK100A	1.250	2.992	3.150	3.898	2.756	0.669	2.362	977 - 1232	4.2	14 000

**) T = Min. and Max. transmittable torque using a h6 cylindrical tool, full depth insert.*
For additional information see section Technical Information.

Information:

- Runout accuracy < 0.004 mm at 2.5 x D1 (max. 50 mm)
  ≤ 0.00016 inch at 2.5x D1 (max. 1.969 inch)
- Tool shank h6 or h7 can be used
- Center thread, M12x1, for axial length adjustment screw (screw not included) Part no. S042
- Coolant through on all holders
- Bore for data carrier

Accessories:

Use preset Torque Wrench, 10 Nm, to ensure correct mounting of tools. Part no. 19052

ETP HYDRO-GRIP HD can be used with reducing sleeves.
For additional information see section Accessories.

ETP HYDRO-GRIP® PENCIL
HSK Form A

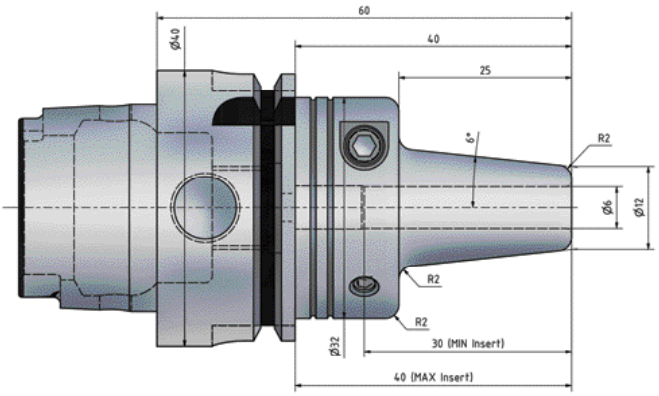

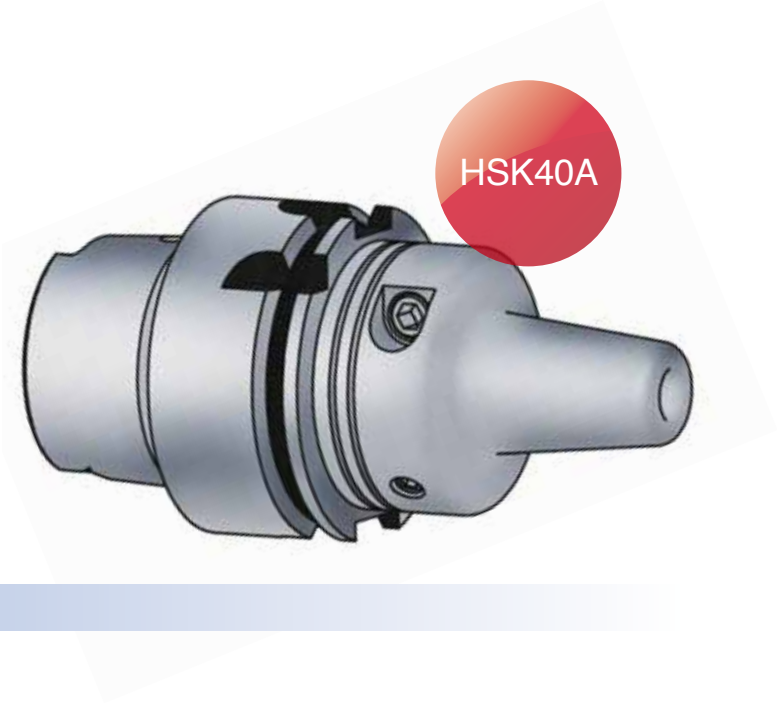

707080 ETP HYDRO-GRIP PENCIL 6x25/HSK40A

ETP HYDRO-GRIP® PENCIL
HSK Form E

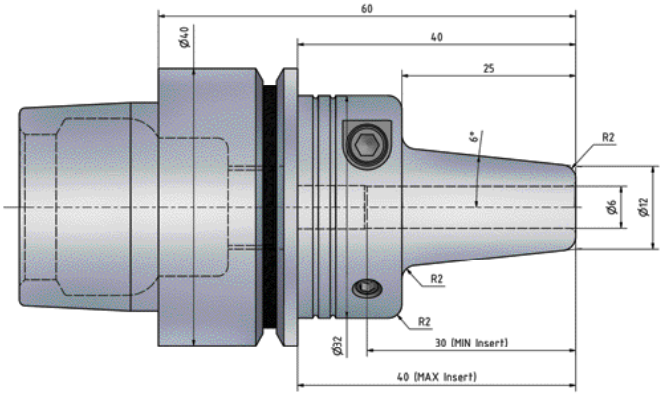

706903 ETP HYDRO-GRIP PENCIL 6x25/HSK40E

Information:
- Runout accuracy < 0.004 mm at 2.5 x dmt (max. 50 mm)
  ≤ 0.00016 inch at 2.5x dmt (max. 1.969 inch)
- Tool shank h6 or h7 can be used
- Coolant through on all holders
- Bore for data carrier on HSK40A

Accessories:
Use preset Torque Wrench, 1.8 Nm, to ensure correct mounting of tools. Part no. 19070.

ETP HYDRO-GRIP can be used with reducing sleeves.
For additional information see section Accessories.

HYDRO-GRIP

ETP HYDRO-GRIP® PENCIL HSK Form A - DIN 69893

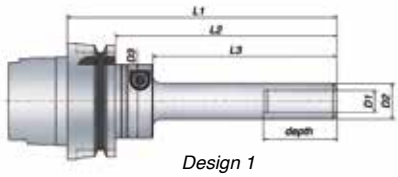

Design 1

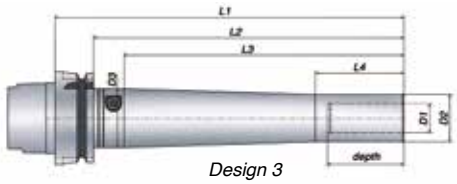

Design 3

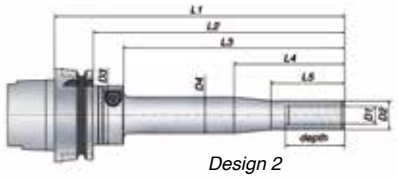

Design 2

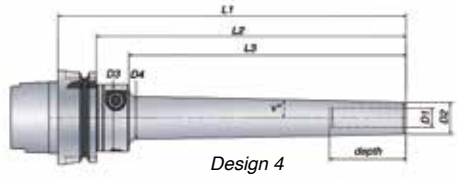

Design 4

Metric range

Technical Specification *HSK Form A*

Design	HSK size	Part no.	Item description	D1	D2	D3	D4	L1	L2	L3	L4	L5	v°	depth	T* Nm	Weight kg	G 2.5 at rpm
				Dimensions, mm													
3	50	682980	HG PENCIL-20x110/HSK50A	20	32	40		156.5	130.5	110	60			52	260-425	1.3	20 000
1	63	683810	HG PENCIL-6x50/HSK63A **	6	12	40		96.5	70.5	50				40	12-22	0.9	25 000
1		683740	HG PENCIL-8x50/HSK63A	8	14.5	40		96.5	70.5	50				40	27-40	0.9	25 000
1		683760	HG PENCIL-10x50/HSK63A	10	17	40		96.5	70.5	50				40	35-70	0.9	25 000
1		683750	HG PENCIL-10x100/HSK63A	10	17	40		146.5	120.5	100				40	35-70	1.0	15 000
1		683830	HG PENCIL-12x50/HSK63A	12	19.5	40		96.5	70.5	50				40	60-125	0.9	25 000
1		705709	HG PENCIL-12x65/HSK63A	12	22	40		109	83	65				46	60-125	1.1	25 000
1		683840	HG PENCIL-12x100/HSK63A	12	19.5	40		146.5	120.5	100				40	60-125	1.0	15 000
2		683820	HG PENCIL-12x150/HSK63A	12	19.5	40	24.5	196.5	170.5	150	75	50		40	60-125	1.2	10 000
4		683825	HG PENCIL-12x150/HSK63A D4	12	18	40	33.3	196.5	170.5	150			3	40	60-125	1.2	10 000
1		683780	HG PENCIL-16x75/HSK63A	16	26	40		121.5	95.5	75				50	165-270	1.1	15 000
1		683770	HG PENCIL-16x125/HSK63A	16	26	40		171.5	145.5	125				50	165-270	1.3	10 000
3		683790	HG PENCIL-20x110/HSK63A	20	32	40		156.5	130.5	110	60			52	260-425	1.5	20 000
4		683795	HG PENCIL-20x110/HSK63A D4	20	28	40	39.5	156.5	130.5	110			3	52	260-425	1.5	20 000
3		683800	HG PENCIL-20x190/HSK63A	20	32	40		236.5	210.5	190	60			52	260-425	2.1	10 000
4		683805	HG PENCIL-20x190/HSK63A D4	20	28	40	37.9	236.5	210.5	190			1.5	52	260-425	2.1	10 000

Inch range

Technical Specification *HSK Form A*

Design	HSK size	Part no.	Item description	D1	D2	D3	D4	L1	L2	L3	L4	L5	v°	depth	T* ft·lb	Weight kg	G 2.5 at rpm
				Dimensions, inch													
1	63	683810-T	HG PENCIL-1/4"x50/HSK63A **	0.250	0.472	1.575		3.799	2.776	1.969				1.575	13-20	0.9	25 000
1		683830-T	HG PENCIL-1/2"x50/HSK63A	0.500	0.768	1.575		3.799	2.776	1.969				1.575	55-105	0.9	25 000
1		683840-T	HG PENCIL-1/2"x100/HSK63A	0.500	0.768	1.575		5.768	4.744	3.937				1.575	55-105	1.0	15 000
2		683820-T	HG PENCIL-1/2"x150/HSK63A	0.500	0.768	1.575	0.965	7.736	6.713	5.906	2.953	1.969		1.575	55-105	1.2	10 000
4		683825-T	HG PENCIL-1/2"x150/HSK63A D4	0.500	0.709	1.575	1.311	7.736	6.713	5.906			3	1.575	55-105	1.2	10 000
3		683790-T	HG PENCIL-3/4"x110/HSK63A	0.750	1.260	1.575		6.161	5.138	4.331	2.362			2.047	192-314	1.5	20 000
4		683795-T	HG PENCIL-3/4"x110/HSK63A D4	0.750	1.102	1.575	1.555	6.161	5.138	4.331			3	2.047	192-314	1.5	20 000
3		683800-T	HG PENCIL-3/4"x190/HSK63A	0.750	1.260	1.575		9.311	8.287	7.480	2.362			2.047	192-314	2.1	10 000
4		683805-T	HG PENCIL-3/4"x190/HSK63A D4	0.750	1.102	1.575	1.492	9.311	8.287	7.480			1.5	2.047	192-314	2.1	10 000

**) T = Min. and Max. transmittable torque using a h6 cylindrical tool, full depth insert. For additional information see section Technical Information.*
***) Center thread, M5x0.8, for axial length adjustment screw (screw not included). Part no. S041.*

Information:

- Runout accuracy < 0.004 mm at 2.5 x D1 (max. 50 mm)
  ≤0.00016 inch at 2.5x D1 (max. 1.969 inch)
  ≤0.007 mm at 2.5 x D1 at length L1 > 125 mm
  ≤0.00028 inch at 2.5x D1 at length L1 > 4.921 inch
- Tool shank h6 or h7 can be used
- Coolant through on all holders
- Bore for data carrier

Accessories:
Use preset Torque Wrench, 6 Nm, to ensure correct mounting of tools. Part no. 19050

ETP HYDRO-GRIP PENCIL can be used with reducing sleeves.
For additional information see section Accessories.

ETP HYDRO-GRIP® PENCIL HSK 100 Form A - DIN 69893

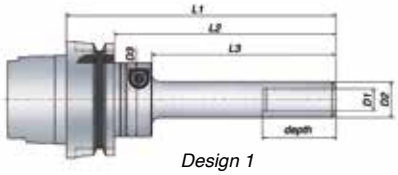

Design 1

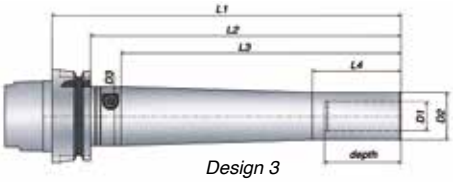

Design 3

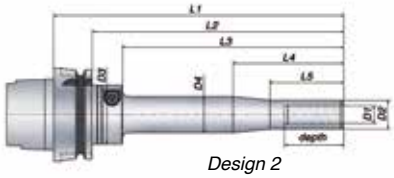

Design 2

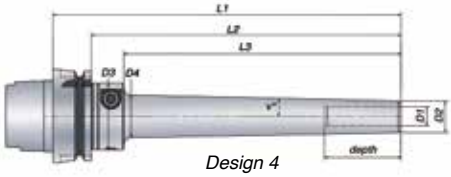

Design 4

Metric range

Technical Specification *HSK 100 Form A*

Design	HSK size	Part no.	Item description	D1	D2	D3	D4	L1	L2	L3	L4	L5	v°	depth	T* Nm	Weight kg	G 2.5 at rpm
				Dimensions, mm													
1	100	683860	HG PENCIL-10x50/HSK100A	10	17	40		117	88	50				40	35-70	2.4	14 000
1		683850	HG PENCIL-10x100/HSK100A	10	17	40		167	138	100				40	35-70	2.5	14 000
1		683890	HG PENCIL-12x50/HSK100A	12	19.5	40		117	88	50				40	60-125	2.4	14 000
1		683920	HG PENCIL-12x100/HSK100A	12	19.5	40		167	138	100				40	60-125	2.5	14 000
2		683930	HG PENCIL-12x150/HSK100A	12	19.5	40	24.5	217	188	150	75	50		40	60-125	2.7	10 000
4		683935	HG PENCIL-12x150/HSK100A D4	12	18	40	33.3	217	188	150			3	40	60-125	2.7	10 000
1		683880	HG PENCIL-16x75/HSK100A	16	26	40		142	113	75				50	165-270	2.6	14 000
1		683870	HG PENCIL-16x125/HSK100A	16	26	40		192	163	125				50	165-270	2.8	10 000
3		683900	HG PENCIL-20x110/HSK100A	20	32	40		177	148	110	60			52	260-425	3.0	14 000
4		683905	HG PENCIL-20x110/HSK100A D4	20	28	40	39.5	177	148	110			3	52	260-425	3.0	14 000
3		683910	HG PENCIL-20x190/HSK100A	20	32	40		257	228	190	60			52	260-425	3.6	10 000
4		683915	HG PENCIL-20x190/HSK100A D4	20	28	40	37.9	257	228	190			1.5	52	260-425	3.6	10 000

Inch range

Technical Specification *HSK 100 Form A*

Design	HSK size	Part no.	Item description	D1	D2	D3	D4	L1	L2	L3	L4	L5	v°	depth	T* ft·lb	Weight kg	G 2.5 at rpm
				Dimensions, inch													
1	100	683890-T	HG PENCIL-1/2"x50/HSK100A	0.500	0.768	1.575		4.606	3.465	1.969				1.575	55-105	2.4	14 000
1		683920-T	HG PENCIL-1/2"x100/HSK100A	0.500	0.768	1.575		6.575	5.433	3.937				1.575	55-105	2.5	14 000
2		683930-T	HG PENCIL-1/2"x150/HSK100A	0.500	0.768	1.575	0.965	8.543	7.402	5.906	2.953	1.969		1.575	55-105	2.7	10 000
4		683935-T	HG PENCIL-1/2"x150/HSK100A D4	0.500	0.709	1.575	1.311	8.543	7.402	5.906			3	1.575	55-105	2.7	10 000
3		683900-T	HG PENCIL-3/4"x110/HSK100A	0.750	1.260	1.575		6.969	5.827	4.331	2.362			2.047	192-314	3.0	14 000
4		683905-T	HG PENCIL-3/4"x110/HSK100A D4	0.750	1.102	1.575	1.555	6.969	5.827	4.331			3	2.047	192-314	3.0	14 000
3		683910-T	HG PENCIL-3/4"x190/HSK100A	0.750	1.260	1.575		10.118	8.976	7.480	2.362			2.047	192-314	3.6	10 000
4		683915-T	HG PENCIL-3/4"x190/HSK100A D4	0.750	1.102	1.575	1.492	10.118	8.976	7.480			1.5	2.047	192-314	3.6	10 000

**) T = Min. and Max. transmittable torque using a h6 cylindrical tool, full depth insert. For additional information see section Technical Information.*

Information:

- Runout accuracy < 0.004 mm at 2.5 x D1 (max. 50 mm)
  ≤0.00016 inch at 2.5x D1 (max. 1.969 inch)
  ≤0.007 mm at 2.5 x D1 at length L1 > 125 mm
  ≤0.00028 inch at 2.5x D1 at length L1 > 4.921 inch
- Tool shank h6 or h7 can be used
- Coolant through on all holders
- Bore for data carrier

Accessories:
Use preset Torque Wrench, 6 Nm, to ensure correct mounting of tools. Part no. 19050

ETP HYDRO-GRIP PENCIL can be used with reducing sleeves.
For additional information see section Accessories.

ETP HYDRO-GRIP®
HSK Form C - DIN 69893

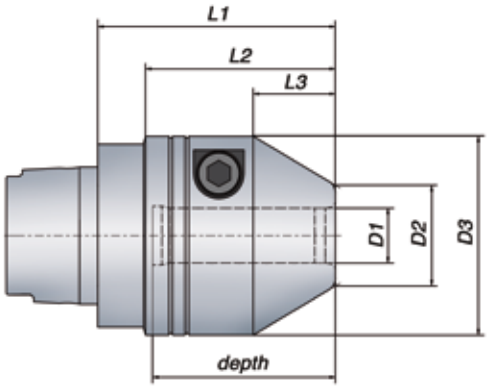

Metric range

Technical Specification *HSK Form C*

HSK size	Part no.	Item description	D1	D2	D3	L1	L2	L3	depth	T* Nm	Weight kg	G 2.5 at rpm
			Dimensions, mm									
32	705667	HG-12/HSK32C	12	22	43.5	52	40.5	18	40	60-125	0.4	25 000
	706142	HG-12x80/HSK32C	12	22	43.5	80	68.5	18	40	60-125	0.8	25 000
	706143	HG-12x110/HSK32C	12	22	43.5	110	98.5	18	40	60-125	1.1	25 000
	705589	HG PENCIL-12x50/HSK32C	12	19.5	40	85	73.9	50	40	60-125	0.5	25 000
40	705668	HG-12/HSK40C	12	22	43.5	52	41.5	18	40	60-125	0.5	25 000
	682800	HG PENCIL-12x50/HSK40C	12	19.5	40	82.5		50	40	60-125	0.5	25 000
	705673	HG-20/HSK40C	20	30	52	64	52.4	30	52	260 - 425	0.7	25 000
50	705716	HG-20/HSK50C	20	30	52	67	54.5	30	52	260-425	0.8	25 000

Inch range

Technical Specification *HSK Form C*

HSK size	Part no.	Item description	D1	D2	D3	L1	L2	L3	depth	T* ft·lb	Weight kg	G 2.5 at rpm
			Dimensions, inch									
40	706094	HG-1”/HSK40C	1.000	1.378	2.323	2.835	2.343	1.339	2.205	354 - 524	0.9	25 000
50	705695	HG-1”/HSK50C	1.000	1.378	2.323	2.795	2.303	1.339	2.205	354 - 524	1.0	25 000

**) T = Min. and Max. transmittable torque using a h6 cylindrical tool, full depth insert. For additional information see section Technical Information.*

Information:
- Runout accuracy ≤ 0.004 mm at 2.5 x D1 (max. 50 mm)
  ≤ 0.00016 inch at 2.5x D1 (max. 1.969 inch)
- Tool shank h6 or h7 can be used
- Center thread, Part no. S057-M8x1.25, for axial length adjustment screw (screw not included)
- Coolant through on all holders
- Bore for data carrier

Accessories:
Use preset Torque Wrench, 6 Nm, to ensure correct mounting of tools. Part no. 19050.

ETP HYDRO-GRIP can be used with reducing sleeves.
For additional information see section Accessories.

ETP HYDRO-GRIP®

HSK Form C - For HYDROMAT® Rotary transfer machines

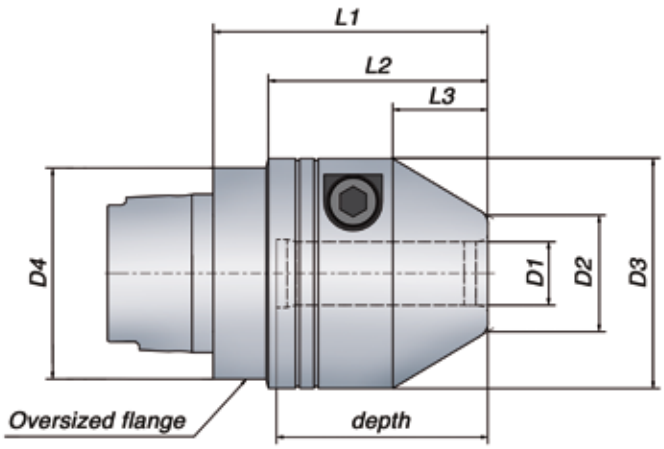

Metric range

Technical Specification *HSK Form C*

HSK size	Part no.	Item description	D1	D2	D3	D4	L1	L2	L3	depth	T* Nm	Weight kg	G 2.5 at rpm
			Dimensions, mm										
32	705727	HG-12/HSK32C - HM40	12	22	43.5	40	52	41.5	18	40	60-125	0.4	25 000
40	706236	HG SLENDER-12/HSK40C-HM50	12	32	40	50	83.5	73.5	43	40	60-125	0.7	25 000
	706383	HG-16/HSK40C-HM50	16	26	48	50	62	52	28	50	165-270	0.6	25 000
	706387	HG-20/HSK40C-HM50	20	32	52	50	64	54	30	52	260-425	0.7	25 000
	705728	HG-20/HSK40C - HM50	20	30	52	50	64	53.7	30	52	260-425	0.7	25 000
50	705729	HG-32/HSK50C - HM63	32	42	69.5	63	85	64.1	38	60	820-1250	1.6	25 000

Inch range

Technical Specification *HSK Form C*

HSK size	Part no.	Item description	D1	D2	D3	D4	L1	L2	L3	depth	T* ft·lb	Weight kg	G 2.5 at rpm
			Dimensions, mm										
40	705728-T	HG-3/4"/HSK40C - HM50	0.750	1.181	2.047	1.969	2.520	2.114	1.181	2.047	192-314	0.8	25 000

**) T = Min. and Max. transmittable torque using a h6 cylindrical tool, full depth insert. For additional information see section Technical Information.*

Information:

- Runout accuracy ≤ 0.004 mm at 2.5 x D1 (max. 50 mm)
  ≤ 0.00016 inch at 2.5x D1 (max. 1.969 inch)
- Tool shank h6 or h7 can be used
- Center thread, Part no. S057-M8x1.25, for axial length adjustment screw (screw not included)
- Coolant through on all holders
- Bore for data carrier

Accessories:

Use preset Torque Wrench, 6 Nm, to ensure correct mounting of tools. Part no. 19050.

ETP HYDRO-GRIP can be used with reducing sleeves.
For additional information see section Accessories.

HYDRO-GRIP

ETP HYDRO-GRIP® COMPACT
HSK Form F - DIN 69893

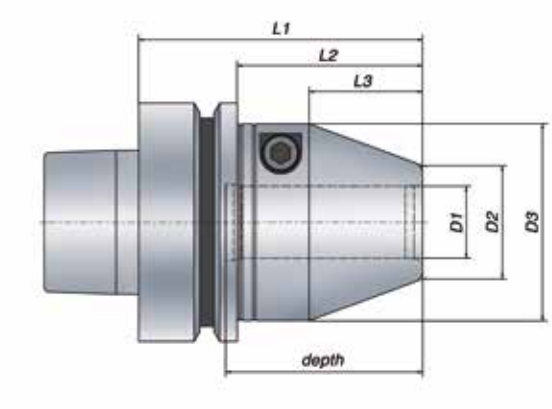

Metric range

Technical Specification *HSK Form F*

	HSK size	Part no.	Item description	D1	D2	D3	L1	L2	L3	depth	T* Nm	Weight kg	G 2.5 at rpm
				Dimensions, mm									
	63	705762	HG COMPACT-12/HSK63F	12	22	43.5	75	49	18	40	60 - 125	1.1	25 000
	63	705764	HG COMPACT-16/HSK63F	16	26	48	75	49	28	50	165 - 270	1.1	25 000
	63	705766	HG COMPACT-20/HSK63F	20	30	52	75	49	30	52	260 - 425	1.1	25 000
NEW!	63	706274	HG COMPACT-25/HSK63F	25	35	59	75	49	9	56	480 - 710	1.3	25 000

Inch range

Technical Specification *HSK Form F*

	HSK size	Part no.	Item description	D1	D2	D3	L1	L2	L3	depth	T* ft·lb	Weight kg	G 2.5 at rpm
				Dimensions, inch									
	63	705763	HG COMPACT-1/2”/HSK63F	0.500	0.866	1.713	2.953	1.929	0.709	1.575	55-105	1.1	25 000
	63	705765	HG COMPACT-5/8”/HSK63F	0.625	1.024	1.890	2.953	1.929	1.102	1.969	122-199	1.1	25 000
	63	705681	HG COMPACT-3/4”/HSK63F	0.750	1.181	2.047	2.953	1.929	1.181	2.047	192-314	1.1	25 000
NEW!	63	706427	HG COMPACT-1”/HSK63F	1.000	1.378	2.323	2.953	1.929	0.354	2.205	354 - 524	1.3	25 000

**) T = Min. and Max. transmittable torque using a h6 cylindrical tool, full depth insert. For additional information see section Technical Information.*

Information:
- Runout accuracy ≤ 0.004 mm at 2.5 x D1 (max. 50 mm)
  ≤ 0.00016 inch at 2.5x D1 (max. 1.969 inch)
- Tool shank h6 or h7 can be used
- Center thread, M8x1.25. Axial length adjustment screw - included in shipment. Max. adjustment 5 mm. Part no: S502
- Coolant through on all holders
  Axial length adjustment screw with coolant hole - available as accessory. Max. adjustment 5 mm. To be ordered seperatly: part no: S-7471

Accessories:
Use preset Torque Wrench, 6 Nm, to ensure correct mounting of tools. Part no. 19050.

ETP HYDRO-GRIP COMPACT can be used with reducing sleeves.
For additional information see section Accessories.

ETP HYDRO-GRIP® SLENDER
HSK Form F - DIN 69893

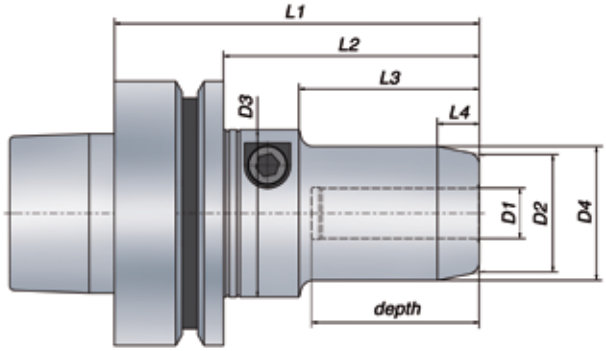

Metric range

Technical Specification *HSK Form F*

HSK size	Part no.	Item description	Dimensions, mm D1	D2	D3	D4	L1	L2	L3	L4	depth	T* Nm	Weight kg	G 2.5 at rpm
63	642680	HG SLENDER-12/HSK63F	12	28	40	32	87	61	43	10	40	60-125	1	25 000
	642690	HG SLENDER-16/HSK63F	16	34	40	38	87	61	43	10	40	165-270	1.1	25 000
	642700	HG SLENDER-20/HSK63F	20	36	50	40	99	73	55	10	52	260-425	1.3	25 000
	639130	HG SLENDER-25/HSK63F	25	41	50	45	103	77	59	10	56	480-710	1.4	25 000

Inch range

Technical Specification *HSK Form F*

HSK size	Part no.	Item description	Dimensions, inch D1	D2	D3	D4	L1	L2	L3	L4	depth	T* ft·lb	Weight kg	G 2.5 at rpm
63	659400	HG SLENDER-3/8”/HSK63F **	0.375	1.102	1.575	1.260	3.425	2.402	1.693	0.394	1.575	22-52	1	25 000
	642710	HG SLENDER-1/2”/HSK63F	0.500	1.339	1.575	1.260	3.425	2.402	1.693	0.394	1.575	55-105	1	25 000
	642720	HG SLENDER-5/8”/HSK63F	0.625	1.339	1.575	1.496	3.425	2.402	1.693	0.394	1.575	122-199	1.1	25 000
	642730	HG SLENDER-3/4”/HSK63F	0.750	1.417	1.969	1.575	3.898	2.874	2.165	0.394	2.047	192-314	1.3	25 000
	639140	HG SLENDER-1”/HSK63F	1.000	1.614	1.969	1.772	4.055	3.031	2.323	0.394	2.205	354-524	1.4	25 000

**) T = Min. and Max. transmittable torque using a h6 cylindrical tool, full depth insert. For additional information see section Technical Information.*

**) Full insertion required for the 3/8” size

Information:

- Runout accuracy ≤ 0.004 mm at 2.5 x D1 (max. 50 mm), ≤ 0.00016 inch at 2.5x D1 (max. 1.969 inch)
- Tool shank h6 or h7 can be used
- Center thread, for axial length adjustment screw (screw not included)

Size 12,1/2”, 16, 5/8”: M8x1.25
Size 20, 3/4, 25, 1”: M10x1.5
Size 3/8” - no center thread

Accessories:

Use preset Torque Wrench, 6 Nm, to ensure correct mounting of tools. Part no. 19050.

ETP HYDRO-GRIP SLENDER can be used with reducing sleeves.
For additional information see section Accessories.

HYDRO-GRIP

ETP HYDRO-GRIP® PENCIL HSK Form F - DIN 69893

Design 1

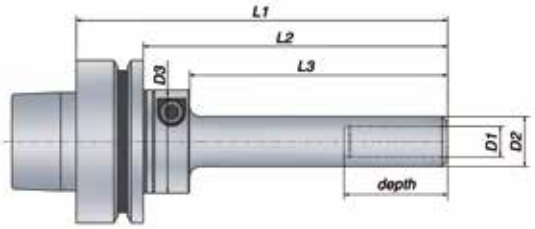

Design 2

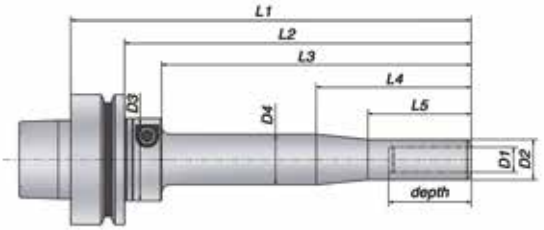

Design 3

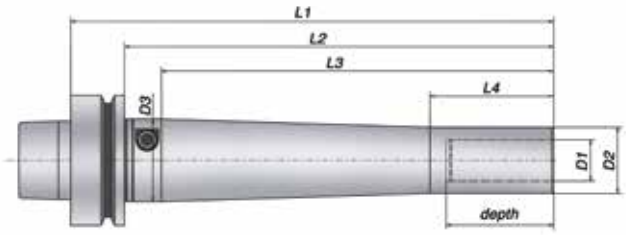

Metric range

Technical Specification *HSK Form F*

Design	HSK size	Part no.	Item description	D1	D2	D3	D4	L1	L2	L3	L4	L5	depth	T* Nm	Weight kg	G 2.5 at rpm
				Dimensions, mm												
1	63	684400	HG PENCIL-6x50/HSK63F	6	12	40		94	68	50			40	12-22	0.8	25 000
1		684440	HG PENCIL-12x50/HSK63F	12	19.5	40		94	68	50			40	60-125	0.9	25 000
1		684450	HG PENCIL-12x100/HSK63F	12	19.5	40		144	118	100			40	60-125	1	15 000
2		684460	HG PENCIL-12x150/HSK63F	12	19.5	40	24.5	194	168	150	75	50	40	60-125	1.2	10 000
3		684490	HG PENCIL-20x110/HSK63F	20	32	40		154	128	110	60		52	260-425	1.4	20 000
3		684500	HG PENCIL-20x190/HSK63F	20	32	40		234	208	190	60		52	260-425	2.1	10 000

Inch range

Technical Specification *HSK Form F*

Design	HSK size	Part no.	Item description	D1	D2	D3	D4	L1	L2	L3	L4	L5	depth	T* ft·lb	Weight kg	G 2.5 at rpm
				Dimensions, inch												
1	63	684540	HG PENCIL-1/2”x50/HSK63F	0.500	0.768	1.575		3.701	2.677	1.969			1.575	55-105	0.9	25 000
1		684550	HG PENCIL-1/2”x100/HSK63F	0.500	0.768	1.575		5.669	4.646	3.937			1.575	55-105	1	15 000
2		684560	HG PENCIL-1/2”x150/HSK63F	0.500	0.768	1.575	0.965	7.638	6.614	5.906	2.953	1.969	1.575	55-105	1.2	10 000
3		684590	HG PENCIL-3/4”x110/HSK63F	0.750	1.260	1.575		6.063	5.039	4.331	2.362		2.047	192-314	1.4	20 000
3		684600	HG PENCIL-3/4”x190/HSK63F	0.750	1.260	1.575		9.213	8.189	7.480	2.362		2.047	192-314	2.1	10 000

**) T = Min. and Max. transmittable torque using a h6 cylindrical tool, full depth insert. For additional information see section Technical Information.*

Information:

- Runout accuracy < 0.004 mm at 2.5 x D1 (max. 50 mm)
  ≤0.00016 inch at 2.5x D1 (max. 1.969 inch)
  ≤0.007 mm at 2.5 x D1 at length L1 > 125 mm
  ≤0.00028 inch at 2.5x D1 at length L1 > 4.921 inch
- Tool shank h6 or h7 can be used
- Coolant through on all holders

Accessories:

Use preset Torque Wrench, 6 Nm, to ensure correct mounting of tools. Part no. 19050

ETP HYDRO-GRIP PENCIL can be used with reducing sleeves.
For additional information see section Accessories.

ETP HYDRO-GRIP®

ISO Form AD/B - 7388-1

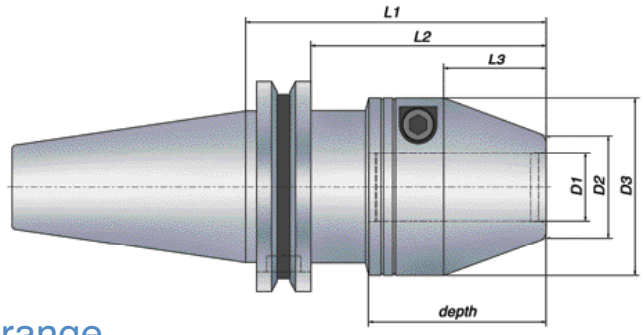

Metric range

Technical Specification *ISO Form AD/B*

Taper	Part no.	Item description	Dimensions, mm D1	D2	D3	L1	L2	L3	depth	T* Nm	Weight kg	G 2.5 at rpm
40	685810	HG-12/ISO40	12	22	43.5	56	36.9	18	40	60-125	1.1	25 000
	685820	HG-12x100/ISO40	12	22	43.5	100	80.9	18	40	60-125	1.6	25 000
	685830	HG-16/ISO40	16	26	48	86	66.9	28	50	165-270	1.3	25 000
	685840	HG-16x125/ISO40	16	26	48	125	105.9	28	50	165-270	2.1	25 000
	685850	HG-20/ISO40	20	30	52	88	68.9	30	52	260-425	1.6	25 000
	685860	HG-20x125/ISO40	20	30	52	125	105.9	30	52	260-425	2.2	25 000
	685870	HG-25/ISO40	25	35	59	93	73.9	34	56	480-710	1.7	25 000
50	685880	HG-12/ISO50	12	22	43.5	56	36.9	18	40	60-125	2.9	14 000
	685890	HG-12x100/ISO50	12	22	43.5	100	80.9	18	40	60-125	3.4	14 000
	685900	HG-16/ISO50	16	26	48	66	46.9	28	50	165-270	3.1	14 000
	685910	HG-16x125/ISO50	16	26	48	125	105.9	28	50	165-270	3.9	14 000
	685920	HG-20/ISO50	20	30	52	68	48.9	30	52	260-425	3.1	14 000
	685930	HG-20x150/ISO50	20	30	52	150	130.9	30	52	260-425	4.5	14 000
	685940	HG-25/ISO50	25	35	59	72	52.9	34	56	480-710	3.3	14 000
	685950	HG-25x150/ISO50	25	35	59	150	130.9	34	56	480-710	4.9	14 000
	685960	HG-32/ISO50	32	42	69.5	77	57.9	38	60	820-1250	3.6	14 000

Inch range

Technical Specification *ISO Form AD/B*

Taper	Part no.	Item description	Dimensions, inch D1	D2	D3	L1	L2	L3	depth	T* ft·lb	Weight kg	G 2.5 at rpm
40	685810-T	HG-1/2”/ISO40	0.500	0.866	1.713	2.205	1.453	0.709	1.575	55-105	1.1	25 000
	685820-T	HG-1/2”x100/ISO40	0.500	0.866	1.713	3.937	3.185	0.709	1.575	55-105	1.6	25 000
	685850-T	HG-3/4”/ISO40	0.750	1.181	2.047	3.465	2.713	1.181	2.047	192-314	1.6	25 000
	685860-T	HG-3/4”x125/ISO40	0.750	1.181	2.047	4.921	4.169	1.181	2.047	192-314	2.2	25 000
	685870-T	HG-1”/ISO40	1.000	1.378	2.323	3.661	2.909	1.339	2.205	354-524	1.7	25 000
50	685920-T	HG-3/4”/ISO50	0.750	1.181	2.047	2.677	1.925	1.181	2.047	192-314	3.1	14 000
	685930-T	HG-3/4”x150/ISO50	0.750	1.181	2.047	5.906	5.154	1.181	2.047	192-314	4.5	14 000
	685940-T	HG-1”/ISO50	1.000	1.378	2.323	2.835	2.083	1.339	2.205	354-524	3.3	14 000
	685950-T	HG-1”x150/ISO50	1.000	1.378	2.323	5.906	5.154	1.339	2.205	354-524	4.9	14 000
	685960-T	HG-1 1/4”/ISO50	1.250	1.654	2.736	3.031	2.280	1.496	2.362	605-922	3.6	14 000

) T = Min. and Max. transmittable torque using a h6 cylindrical tool, full depth insert. For additional information see section Technical Information.

Information:

- Runout accuracy < 0.004 mm at 2.5 x D1 (max. 50 mm)
  ≤ 0.00016 inch at 2.5x D1 (max. 1.969 inch)
- Tool shank h6 or h7 can be used
- Center thread, Part no. S057-M8x1.25, for axial length adjustment screw (screw not included)
- Coolant through on all holders
- Bore for data carrier

Accessories:

Use preset Torque Wrench, 6 Nm, to ensure correct mounting of tools. Part no. 19050

ETP HYDRO-GRIP can be used with reducing sleeves.
For additional information see section Accessories.

ETP HYDRO-GRIP® HD
ISO Form AD - 7388-1

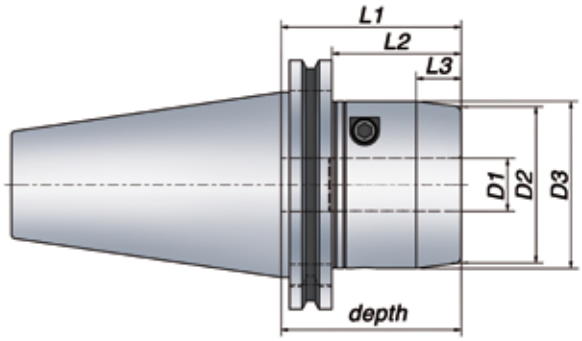

Metric range

Technical Specification *ISO Form AD*

Taper	Part no.	Item description	D1	D2	D3	L1	L2	L3	depth	T* Nm	Weight kg	G 2.5 at rpm
			Dimensions, mm									
40	682190	HG HD-20/ISO40	20	59	63	90	70.9	17	90	400-535	2.1	25 000
50	682200	HG HD-20/ISO50	20	59	63	68	48.9	17	68	400-535	3.5	14 000
	682210	HG HD-25/ISO50	25	70	74	79	59.9	17	79	740-940	4.2	14 000
	682220	HG HD-32/ISO50	32	76	80	83	63.9	17	83	1325-1670	4.4	14 000

Inch range

Technical Specification *ISO Form AD*

Taper	Part no.	Item description	D1	D2	D3	L1	L2	L3	depth	T* ft·lb	Weight kg	G 2.5 at rpm
			Dimensions, inch									
40	682190-T	HG HD-3/4”/ISO40	0.750	2.323	2.480	3.543	2.791	0.669	3.543	295-395	2.1	25 000
50	682200-T	HG HD-3/4”/ISO50	0.750	2.323	2.480	2.677	1.925	0.669	2.677	295-395	3.5	14 000
	682210-T	HG HD-1”/ISO50	1.000	2.756	2.913	3.110	2.358	0.669	3.110	546-693	4.2	14 000
	682220-T	HG HD-1 1/4”/ISO50	1.250	2.992	3.150	3.268	2.516	0.669	3.268	977-1232	4.4	14 000

**) T = Min. and Max. transmittable torque using a h6 cylindrical tool, full depth insert. For additional information see section Technical Information.*

Information:

- Runout accuracy < 0.004 mm at 2.5 x D1 (max. 50 mm)
  ≤ 0.00016 inch at 2.5x D1 (max. 1.969 inch)
- Tool shank h6 or h7 can be used
- Center thread, M12x1, for axial length adjustment screw (screw not included) Part no. S042
- Coolant through on all holders
- Bore for data carrier - available on request

Zubehör:

Bitte den Drehmomentschlüssel, 6 Nm, benutzen um richtiges Anziehen zu gewährleisten. Part no.19050

ETP HYDRO-GRIP PENCIL kann mit Reduzierhülsen verwendet werden.
Für weitere Informationen siehe Abschnitt Zubehör.

ETP HYDRO-GRIP® PENCIL ISO 40 Form AD/B - 7388-1

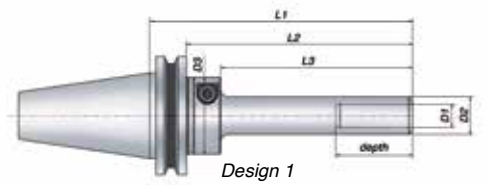

Design 1

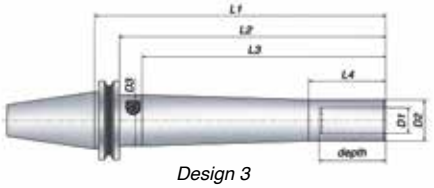

Design 3

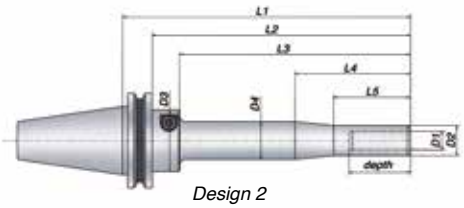

Design 2

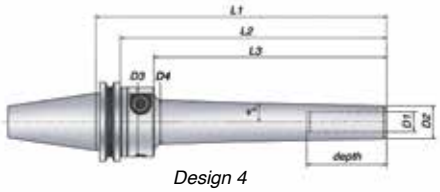

Design 4

Metric range

Technical Specification *ISO 40 Form AD/B*

Design	Taper	Part no.	Item description	D1	D2	D3	D4	L1	L2	L3	L4	L5	v°	depth	T* Nm	Weight kg	G 2.5 at rpm
				Dimensions, mm													
1	40	683940	HG PENCIL-6x50/ISO40	6	12	40		87	67.9	50				40	12 - 22	1	25 000
1		683950	HG PENCIL-8x50/ISO40	8	14.5	40		87	67.9	50				40	27 - 40	1	25 000
1		683970	HG PENCIL-10x50/ISO40	10	17	40		87	67.9	50				40	35 - 70	1	25 000
1		683960	HG PENCIL-10x100/ISO40	10	17	40		137	117.9	100				40	35 - 70	1.1	15 000
1		684000	HG PENCIL-12x50/ISO40	12	19.5	40		87	67.9	50				40	60 - 125	1.1	25 000
1		684010	HG PENCIL-12x100/ISO40	12	19.5	40		137	117.9	100				40	60 - 125	1.2	15 000
2		684030	HG PENCIL-12x150/ISO40	12	19.5	40	24.5	187	167.9	150	75	50		40	60 - 125	1.4	10 000
4		684035	HG PENCIL-12x150/ISO40 D4	12	18	40	33.3	187	167.9	150			3	40	60 - 125	1.4	10 000
1		683990	HG PENCIL-16x75/ISO40	16	26	40		112	92.9	75				50	165 - 270	1.2	15 000
1		683980	HG PENCIL-16x125/ISO40	16	26	40		162	142.9	125				50	165 - 270	1.4	10 000
3		684020	HG PENCIL-20x110/ISO40	20	32	40		147	127.9	110	60			52	260 - 425	1.6	20 000
4		684025	HG PENCIL-20x110/ISO40 D4	20	28	40	39.5	147	127.9	110			3	52	260 - 425	1.6	20 000
3		684040	HG PENCIL-20x190/ISO40	20	32	40		227	207.9	190	60			52	260 - 425	2.3	10 000
4		684045	HG PENCIL-20x190/ISO40 D4	20	28	40	37.9	227	207.9	190			1.5	52	260 - 425	2.3	10 000

Inch range

Technical Specification *ISO 40 Form AD/B*

Design	Taper	Part no.	Item description	D1	D2	D3	D4	L1	L2	L3	L4	L5	v°	depth	T* ft·lb	Weight kg	G 2.5 at rpm
				Dimensions, inch													
1	40	683940-T	HG PENCIL-1/4"x50/ISO40	0.250	0.472	1.575		3.425	2.673	1.969				1.575	13 - 20	1	25 000
1		684000-T	HG PENCIL-1/2"x50/ISO40	0.500	0.768	1.575		3.425	2.673	1.969				1.575	50 - 105	1.1	25 000
1		684010-T	HG PENCIL-1/2"x100/ISO40	0.500	0.768	1.575		5.394	4.642	3.937				1.575	50 - 105	1.2	15 000
2		684030-T	HG PENCIL-1/2"x150/ISO40	0.500	0.768	1.575	0.965	7.362	6.610	5.906	2.953	1.969		1.575	50 - 105	1.4	10 000
3		684020-T	HG PENCIL-3/4"x110/ISO40	0.750	1.260	1.575		5.787	5.035	4.331	2.362			2.047	192 - 314	1.6	20 000
3		684040-T	HG PENCIL-3/4"x190/ISO40	0.750	1.260	1.575		8.937	8.185	7.480	2.362			2.047	192 - 314	2.3	10 000

**) T = Min. and Max. transmittable torque using a h6 cylindrical tool, full depth insert. For additional information see section Technical Information.*

Information:
- Runout accuracy ≤ 0.004 mm at 2.5 x D1 (max. 50 mm)
  ≤ 0.00016 inch at 2.5x D1 (max. 1.969 inch)
  ≤ 0.007 mm at 2.5 x D1 at length L1 > 125 mm
  ≤ 0.00028 inch at 2.5x D1 at length L1 > 4.921 inch
- Tool shank h6 or h7 can be used
- Coolant through on all holders
- Bore for data carrier

Accessories:

Use preset Torque Wrench, 6 Nm, to ensure correct mounting of tools. Part no. 19050

ETP HYDRO-GRIP PENCIL can be used with reducing sleeves.
For additional information see section Accessories.

ETP HYDRO-GRIP® PENCIL ISO 50 Form AD/B - 7388-1

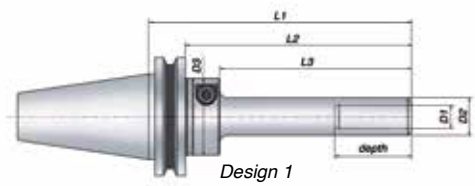

Design 1

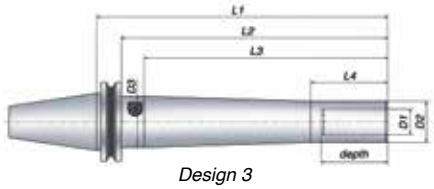

Design 3

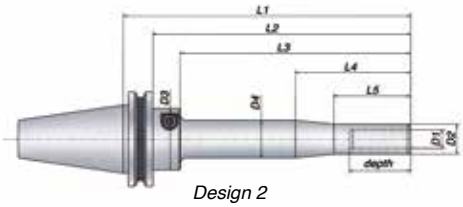

Design 2

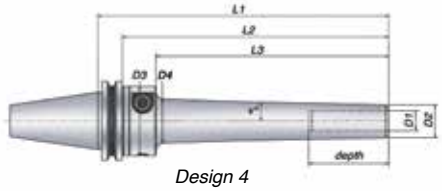

Design 4

Metric range

Technical Specification *ISO 50 Form AD/B*

Design	Taper	Part no.	Item description	D1	D2	D3	D4	L1	L2	L3	L4	L5	v°	depth	T* Nm	Weight kg	G 2.5 at rpm
				Dimensions, mm													
1	50	684190	HG PENCIL 12x50/ISO50	12	19.5	40		87	67.9	50				40	60 - 125	2.9	14 000
1		684200	HG PENCIL 12x100/ISO50	12	19.5	40		137	117.9	100				40	60 - 125	3	14 000
2		684210	HG PENCIL 12x150/ISO50	12	19.5	40	24.5	187	167.9	150	75	50		40	60 - 125	3.2	10 000
4		684215	HG PENCIL 12x150/ISO50 D4	12	18	40		187	167.9	150			3	40	60 - 125	3.2	10 000
3		684240	HG PENCIL 20x110/ISO50	20	32	40		147	127.9	110	60			52	260 - 425	3.4	14 000
4		684245	HG PENCIL 20x110/ISO50 D4	20	28	40		147	127.9	110			3	52	260 - 425	3.4	14 000
3		684250	HG PENCIL 20x190/ISO50	20	32	40		227	207.9	190	60			52	260 - 425	4.1	10 000
4		684255	HG PENCIL 20x190/ISO50 D4	20	28	40		227	207.9	190			1.5	52	260 - 425	4.1	10 000

Inch range

Technical Specification *ISO 50 Form AD/B*

Design	Taper	Part no.	Item description	D1	D2	D3	D4	L1	L2	L3	L4	L5	v°	depth	T* ft·lb	Weight kg	G 2.5 at rpm
				Dimensions, inch													
1	50	684190-T	HG PENCIL 1/2"x50/ISO50	0.500	0.768	1.575		3.425	2.673	1.969				1.575	50 - 105	2.9	14 000
1		684200-T	HG PENCIL 1/2"x100/ISO50	0.500	0.768	1.575		5.394	4.642	3.937				1.575	50 - 105	3	14 000
2		684210-T	HG PENCIL 1/2"x150/ISO50	0.500	0.768	1.575	0.965	7.362	6.610	5.906	2.953	1.969		1.575	50 - 105	3.2	10 000
3		684240-T	HG PENCIL 3/4"x110/ISO50	0.750	1.260	1.575		5.787	5.035	4.331	2.362			2.047	192 - 314	3.4	14 000
3		684250-T	HG PENCIL 3/4"x190/ISO50	0.750	1.260	1.575		8.937	8.185	7.480	2.362			2.047	192 - 314	4.1	10 000

**) T = Min. and Max. transmittable torque using a h6 cylindrical tool, full depth insert. For additional information see section Technical Information.*

Information:
- Runout accuracy ≤ 0.004 mm at 2.5 x D1 (max. 50 mm)
  ≤ 0.00016 inch at 2.5x D1 (max. 1.969 inch)
  ≤ 0.007 mm at 2.5 x D1 at length L1 > 125 mm
  ≤ 0.00028 inch at 2.5x D1 at length L1 > 4.921 inch
- Tool shank h6 or h7 can be used
- Coolant through on all holders
- Bore for data carrier

Accessories:

Use preset Torque Wrench, 6 Nm, to ensure correct mounting of tools. Part no. 19050

ETP HYDRO-GRIP PENCIL can be used with reducing sleeves.
For additional information see section Accessories.

ETP HYDRO-GRIP® S
ISO Form AD - 7388-1

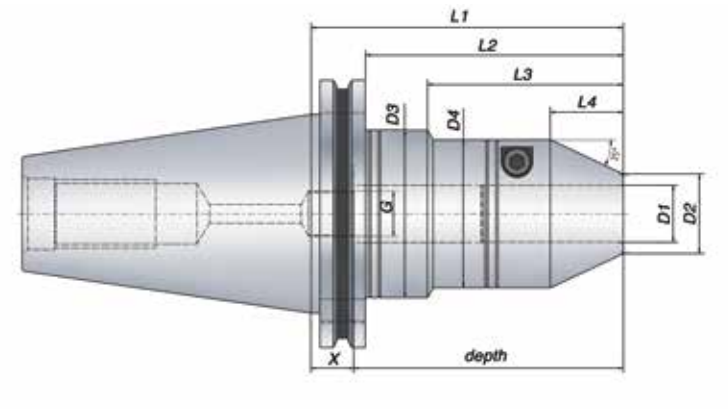

Metric range

Technical Specification *ISO Form AD*

Taper	Part no.	Item description	D1	D2	D3	D4	L1	L2	L3	L4	depth	G	X	T* Nm	Weight kg
			Dimensions, mm												
50	703763	HG S-12x110/ISO50	12	21.5	59	43.5	110	90.9	69	23.6	50	M8x1	60	60-125	3.7
	704378	HG S-20x110/ISO50	20	28	59	52	110	90.9	69	25.7	95	M16x1	15	260-425	3.8
	705839	HG S-25x110/ISO50	25	33	69.5	59	110	90.9	69	27.9	95	M16x1	15	480-710	4.1
	703764	HG S-32x110/ISO50	32	40	69.5		110	90.9		31.6	95	M16x1	15	820-1250	4.3

Inch range

Technical Specification *ISO Form AD*

Taper	Part no.	Item description	D1	D2	D3	D4	L1	L2	L3	L4	depth	G	X	T* ft·lb	Weight kg
			Dimensions, inch												
50	703763-T	HG S-1/2”x110/ISO50	0.500	0.846	2.323	1.713	4.331	3.579	2.717	0.929	1.969	M8x1	2.362	55-105	3.7
	704378-T	HG S-3/4”x110/ISO50	0.750	1.102	2.323	2.047	4.331	3.579	2.717	1.012	3.740	M16x1	0.591	192-314	3.8
	705839-T	HG S-1”x110/ISO50	1.000	1.300	2.736	2.323	4.331	3.579	2.717	1.098	3.740	M16x1	0.591	354-524	4.1
	703764-T	HG S-1 1/4”x110/ISO50	1.250	1.575	2.736		4.331	3.579		1.244	3.740	M16x1	0.591	605-922	4.3

*) T = Min. and Max. transmittable torque using a h6 cylindrical tool, full depth insert.

● From stock
○ On request

Information:
- Runout accuracy ≤ 0.004 mm at 2.5 x D1 (max. 50 mm), ≤ 0.00016 inch at 2.5x D1 (max. 1.969 inch)
- Tool shank h6 or h7 can be used
- Coolant through on all holders
- Bore for data carrier

Accessories:
Use preset Torque Wrench, 6 Nm, to ensure correct mounting of tools. Part no. 19050.

ETP HYDRO-GRIP S can be used with reducing sleeves.
For additional information see section Accessories.

ETP HYDRO-GRIP®
BT Form AD - JIS B 6339

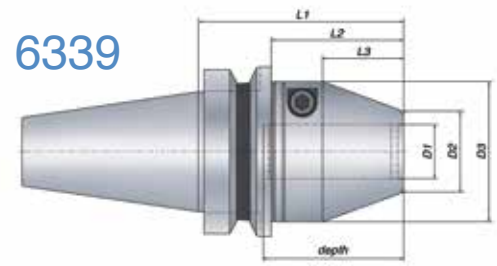

Metric range

Technical Specification *BT Form AD*

Taper	Part no.	Item description	Dimensions, mm D1	D2	D3	L1	L2	L3	depth	T* Nm	Weight kg	G 2.5 at rpm
30	685970	HG-12/BT30	12	22	43.5	59	37	18	40	60-125	0.7	25 000
	685980	HG-16/BT30	16	26	48	69	47	28	50	165-270	1	25 000
	685991	HG-20/BT30	20	30	52	89	54	30	52	260-425	1.1	25 000
	706445	ETP HG 25/BT30 GL=89	25	35	59	89	56	34	56	480-710	1.5	25 000
40	685000	HG-12/BT40	12	22	43.5	64	37	18	40	60-125	1.3	25 000
	685010	HG-12x100/BT40	12	22	43.5	100	73	18	40	60-125	1.7	25 000
	685020	HG-16/BT40	16	26	48	74	47	28	50	165-270	1.4	25 000
	685030	HG-16x125/BT40	16	26	48	125	98	28	50	165-270	1.9	25 000
	685040	HG-20/BT40	20	30	52	76	49	30	52	260-425	1.5	25 000
	685050	HG-20x125/BT40	20	30	52	125	98	30	52	260-425	2.3	25 000
	685060	HG-25/BT40	25	35	59	80	53	34	56	480-710	1.6	25 000
50	685070	HG-12/BT50	12	22	43.5	75	37	18	40	60-125	3.9	14 000
	685080	HG-12x100/BT50	12	22	43.5	100	62	18	40	60-125	4.3	14 000
	685090	HG-16/BT50	16	26	48	85	47	28	50	165-270	4.1	14 000
	685100	HG-16x125/BT50	16	26	48	125	87	28	50	165-270	4.6	14 000
	685110	HG-20/BT50	20	30	52	87	49	30	52	260-425	4.1	14 000
	685120	HG-20x150/BT50	20	30	52	150	112	30	52	260-425	5.2	14 000
	685130	HG-25/BT50	25	35	59	91	53	34	56	480-710	4.3	14 000
	685140	HG-25x150/BT50	25	35	59	150	112	34	56	480-710	5.5	14 000
	685150	HG-32/BT50	32	42	69.5	95	57	38	60	820-1250	4.5	14 000

Inch range

Technical Specification *BT Form AD*

Taper	Part no.	Item description	Dimensions, inch D1	D2	D3	L1	L2	L3	depth	T* ft·lb	Weight kg	G 2.5 at rpm
30	685970-T	HG-1/2"/BT30	0.500	0.866	1.713	2.323	1.457	0.709	1.575	55-105	0.7	25 000
	685991-T	HG-3/4"/BT30	0.750	1.181	2.047	3.504	2.126	1.181	2.047	192-314	1.1	25 000
40	685000-T	HG-1/2"/BT40	0.500	0.866	1.713	2.520	1.457	0.709	1.575	55-105	1.3	25 000
	685010-T	HG-1/2"x100/BT40	0.500	0.866	1.713	3.937	2.874	0.709	1.575	55-105	1.7	25 000
	685040-T	HG-3/4"/BT40	0.750	1.181	2.047	2.992	1.929	1.181	2.047	192-314	1.5	25 000
	685050-T	HG-3/4"x125/BT40	0.750	1.181	2.047	4.921	3.858	1.181	2.047	192-314	2.3	25 000
	685060-T	HG-1"/BT40	1.000	1.378	2.323	3.150	2.087	1.339	2.205	354-524	1.6	25 000
50	685110-T	HG-3/4"/BT50	0.750	1.181	2.047	3.425	1.929	1.181	2.047	192-314	4.1	14 000
	685120-T	HG-3/4"x150/BT50	0.750	1.181	2.047	5.906	4.409	1.181	2.047	192-314	5.2	14 000
	685130-T	HG-1"/BT50	1.000	1.378	2.323	3.583	2.087	1.339	2.205	354-524	4.3	14 000
	685140-T	HG-1"x150/BT50	1.000	1.378	2.323	5.906	4.409	1.339	2.205	354-524	5.5	14 000
	685150-T	HG-1 1/4"/BT50	1.250	1.654	2.736	3.740	2.244	1.496	2.362	605-922	4.5	14 000

**) T = Min. and Max. transmittable torque using a h6 cylindrical tool, full depth insert. For additional information see section Technical Information.*

Information:
- Runout accuracy < 0.004 mm at 2.5 x D1 (max. 50 mm)
  ≤ 0.00016 inch at 2.5x D1 (max. 1.969 inch)
- Tool shank h6 or h7 can be used
- Center thread, Part no. S057- M8x1.25, for axial length adjustment screw (screw not included)
- Coolant through on all holders
- Bore for data carrier - available on request

Accessories:

Use preset Torque Wrench, 6 Nm, to ensure correct mounting of tools. Part no. 19050

ETP HYDRO-GRIP can be used with reducing sleeves.
For additional information see section Accessories.

ETP HYDRO-GRIP®
BT Form AD/B - JIS B 6339 Dual Contact

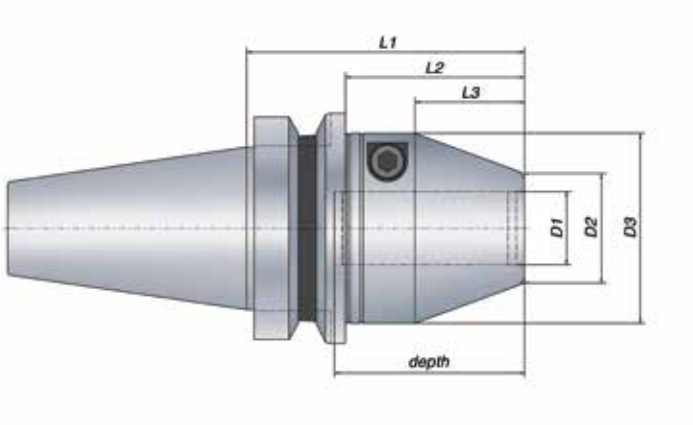

Metric range

Technical Specification *BT Form AD/B Dual Contact*

Taper	Part no.	Item description	D1	D2	D3	L1	L2	L3	depth	T* Nm	Weight kg	G 2.5 at rpm
			Dimensions, mm									
40	681410	HG-20/DC-BT40	20	30	52	88	61	30	52	260-425	1.7	25 000

Inch range

Technical Specification *BT Form AD/B Dual Contact*

Taper	Part no.	Item description	D1	D2	D3	L1	L2	L3	depth	T* ft·lb	Weight kg	G 2.5 at rpm
			Dimensions, inch									
40	681410-T	HG-3/4”/DC-BT40	0.750	1.181	2.047	3.465	2.402	1.181	2.047	192-314	1.7	25 000

**) T = Min. and Max. transmittable torque using a h6 cylindrical tool, full depth insert. For additional information see section Technical Information.*

Information:
- Runout accuracy ≤ 0.004 mm at 2.5 x D1 (max. 50 mm), ≤ 0.00016 inch at 2.5x D1 (max. 1.969 inch)
- Tool shank h6 or h7 can be used
- Center thread, Part no. S057- M8x1.25, for axial length adjustment screw (screw not included)
- Coolant through on all holders
- Bore for data carrier - available on request

Accessories:
Use preset Torque Wrench, 6 Nm, to ensure correct mounting of tools. Part no. 19050.

ETP HYDRO-GRIP can be used with reducing sleeves.
For additional information see section Accessories.

ETP HYDRO-GRIP® HD
BT Form AD - JIS B 6339

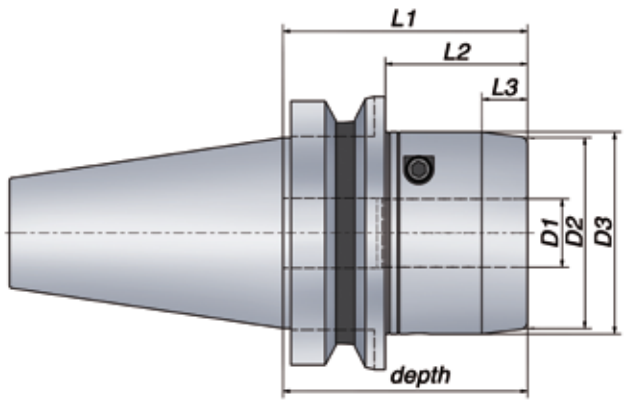

Metric range

Technical Specification *BT Form AD*

Taper	Part no.	Item description	D1	D2	D3	L1	L2	L3	depth	T* Nm	Weight kg	G 2.5 at rpm
			Dimensions, mm									
40	682000	HG HD-20/BT40	20	59	63	79		17	79	400-535	2	25 000
	682300	HG HD-20/DC-BT40	20	59	63	91		17	91	400-535	2.2	25 000
50	682010	HG HD-20/BT50	20	59	63	87	49	17	87	400-535	4.5	25 000
	682020	HG HD-25/BT50	25	70	74	91	53	17	91	740-940	5	14 000
	682030	HG HD-32/BT50	32	76	80	95	57	17	95	1325-1670	5.2	14 000

Dual Contact

Inch range

Technical Specification *BT Form AD*

Taper	Part no.	Item description	D1	D2	D3	L1	L2	L3	depth	T* ft·lb	Weight kg	G 2.5 at rpm
			Dimensions, inch									
40	682000-T	HG HD-3/4”/BT40	0.750	2.323	2.480	3.110		0.669	3.110	295-395	2	25 000
	682300-T	HG HD-3/4”/DC-BT40	0.750	2.323	2.480	3.583		0.669	3.583	295-395	2.2	25 000
50	682010-T	HG HD-3/4”/BT50	0.750	2.323	2.480	3.425	1.929	0.669	3.425	295-395	4.5	25 000
	682020-T	HG HD-1”/BT50	1.000	2.756	2.913	3.583	2.087	0.669	3.583	546-693	5	25 000
	682030-T	HG HD-1 1/4”/BT50	1.250	2.992	3.150	3.740	2.244	0.669	3.740	977-1232	5.2	25 000

Dual Contact

**) T = Min. and Max. transmittable torque using a h6 cylindrical tool. full depth insert. For additional information see section Technical Information*

Information:
- Runout accuracy ≤ 0.004 mm at 2.5 x D1 (max. 50 mm), ≤ 0.00016 inch at 2.5x D1 (max. 1.969 inch)
- Tool shank h6 or h7 can be used
- Center thread, M12x1, for axial length adjustment screw (screw not included) Part no. S042
- Coolant through on all holders
- Bore for data carrier - available on request

Accessories:
Use preset Torque Wrench, 10 Nm, to ensure correct mounting of tools. Part no. 19052.

ETP HYDRO-GRIP HD can be used with reducing sleeves.
For additional information see section Accessories.

ETP HYDRO-GRIP® SLENDER
BT Form AD - JIS B 6339 Dual Contact

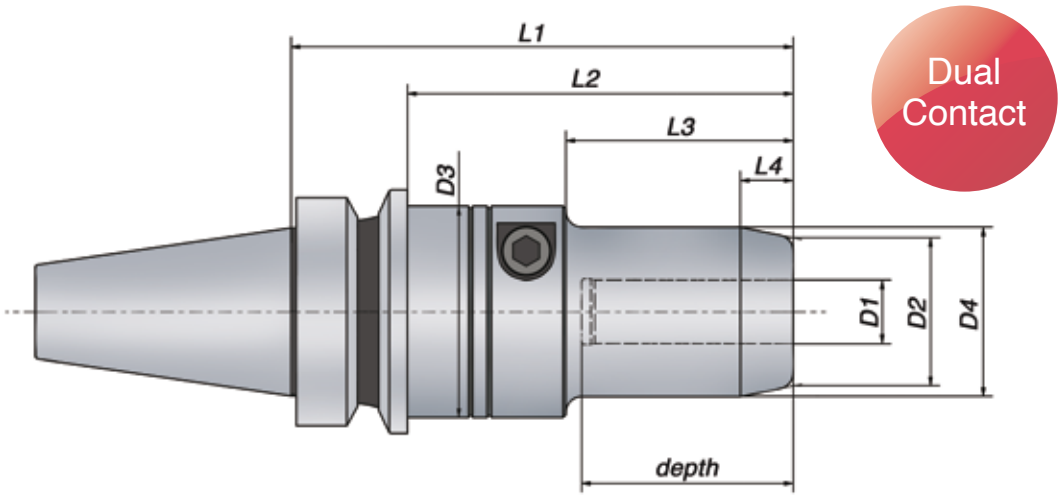

Metric range

Technical Specification *BT Form AD Dual Contact*

Taper	Part no.	Item description	Dimensions, mm D1	D2	D3	D4	L1	L2	L3	L4	depth	T* Nm	Weight kg	G 2.5 at rpm
30	681300	HG SLENDER-12/DC-BT30	12	28	40	32	95	73	43	10	40	60 - 125	0.9	25 000

Inch range

Technical Specification *BT Form AD Dual Contact*

Taper	Part no.	Item description	Dimensions, inch D1	D2	D3	D4	L1	L2	L3	L4	depth	T* ft·lb	Weight kg	G 2.5 at rpm
30	681300-T	HG SLENDER-1/2"/DC-BT30	0.500	1.102	1.575	1.260	3.740	2.874	1.693	0.394	1.575	55 - 105	0.9	25 000

**) T = Min. and Max. transmittable torque using a h6 cylindrical tool. full depth insert. For additional information see section Technical Information.*

Information:
- Runout accuracy ≤ 0.004 mm at 2.5 x D1 (max. 50 mm), ≤ 0.00016 inch at 2.5x D1 (max. 1.969 inch)
- Tool shank h6 or h7 can be used
- Center thread, Part no. S057-M8x1.25, for axial length adjustment screw (screw not included)
- Coolant through on all holders
- Bore for data carrier - available on request

Accessories:
Use preset Torque Wrench, 6 Nm, to ensure correct mounting of tools. Part no. 19050.

ETP HYDRO-GRIP SLENDER can be used with reducing sleeves.
For additional information see section Accessories.

ETP HYDRO-GRIP® PENCIL BT Form AD - JIS B 6339

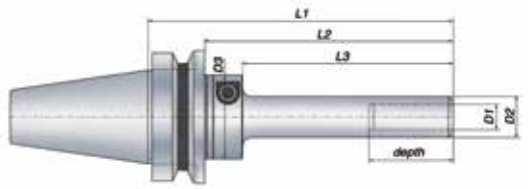

Design 1

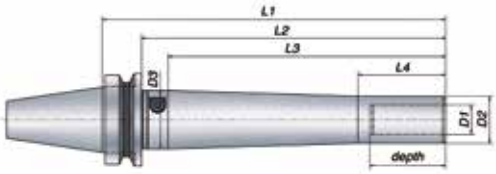

Design 3

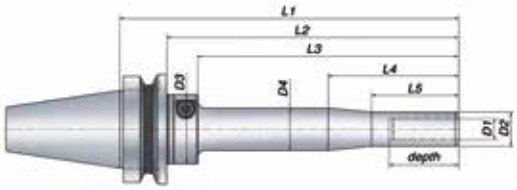

Design 2

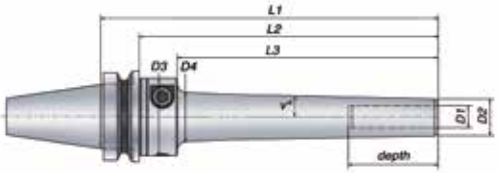

Design 4

Metric range

Technical Specification *BT Form AD*

Design	Taper	Part no.	Item description	D1	D2	D3	D4	L1	L2	L3	L4	L5	v°	depth	T* Nm	Weight kg	G 2.5 at rpm
				Dimensions, mm													
1	30	683000	HG PENCIL-6x50/BT30 **	6	12	40		90	68	50				40	12 - 22	0.6	25 000
1		683010	HG PENCIL-8x50/BT30	8	14.5	40		90	68	50				40	27 - 40	0.6	25 000
1		683030	HG PENCIL-10x50/BT30	10	17	40		90	68	50				40	35 - 70	0.6	25 000
1		683020	HG PENCIL-10x100/BT30	10	17	40		140	118	100				40	35 - 70	0.7	15 000
1		683060	HG PENCIL-12x50/BT30	12	19.5	40		90	68	50				40	60 - 125	0.6	25 000
1		683040	HG PENCIL-12x100/BT30	12	19.5	40		140	118	100				40	60 - 125	0.7	15 000
2		683050	HG PENCIL-12x150/BT30	12	19.5	40	24.5	190	168	150	75	50	3	40	60 - 125	1	10 000
4		683055	HG PENCIL-12x150/BT30 D4	12	18	40	33.3	190	168	150				40	60 - 125	1	10 000
3		684360	HG PENCIL-20x110/BT30	20	32	40		150	128	110	60			52	260 - 425	1.2	20 000
3		684370	HG PENCIL-20x190/BT30	20	32	40		230	208	190	60			52	260 - 425	1.8	10 000

Inch range

Technical Specification *BT Form AD*

Design	Taper	Part no.	Item description	D1	D2	D3	D4	L1	L2	L3	L4	L5	depth	T* ft·lb	Weight kg	G 2.5 at rpm
				Dimensions, inch												
1	30	683000-T	HG PENCIL-1/4"x50/BT30 **	0.250	0.472	1.575		3.543	2.677	1.969			1.575	13-20	0.6	25 000
1		683060-T	HG PENCIL-1/2"x50/BT30	0.500	0.768	1.575		3.543	2.677	1.969			1.575	55-105	0.6	25 000
1		683040-T	HG PENCIL-1/2"x100/BT30	0.500	0.768	1.575		5.512	4.646	3.937			1.575	55-105	0.7	15 000
2		683050-T	HG PENCIL-1/2"x150/BT30	0.500	0.768	1.575	0.965	7.480	6.614	5.906	2.953	1.969	1.575	55-105	1	10 000

**) T = Min. and Max. transmittable torque using a h6 cylindrical tool, full depth insert. For additional information see section Technical Information.*
***) Center thread, M5x0.8, for axial length adjustment screw (screw not included). Part no. S041.*

Information:
- Runout accuracy ≤ 0.004 mm at 2.5 x D1 (max. 50 mm),
  ≤ 0.00016 inch at 2.5x D1 (max. 1.969 inch)
  ≤ 0.007 mm at 2.5 x D1 at length L1 > 125 mm
  ≤ 0.00028 inch at 2.5x D1 at length L1 > 4.921 inch
- Tool shank h6 or h7 can be used
- Coolant through on all holders
- Bore for data carrier - available on request

Accessories:
Use preset Torque Wrench, 6 Nm, to ensure correct mounting of tools. Part no. 19050.

ETP HYDRO-GRIP PENCIL can be used with reducing sleeves.
For additional information see section Accessories.

ETP HYDRO-GRIP® PENCIL

BT 40 Form AD/B - JIS B 6339

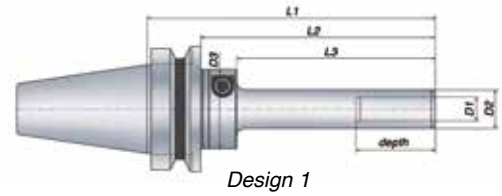

Design 1

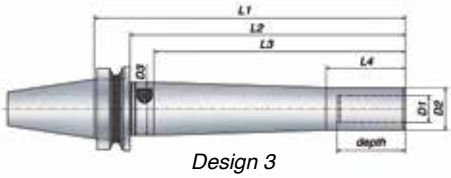

Design 3

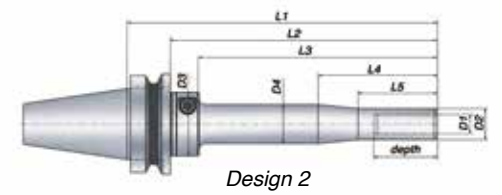

Design 2

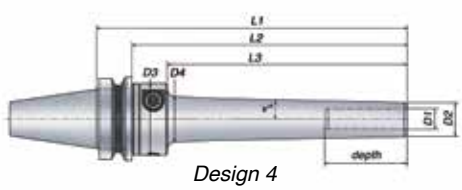

Design 4

Slim and long reach

Metric range

Technical Specification *BT 40 Form AD/B*

Design	Taper	Part no.	Item description	D1	D2	D3	D4	L1	L2	L3	L4	L5	v°	depth	T* Nm	Weight kg	G 2.5 at rpm
				Dimensions, mm													
1	40	683070	HG PENCIL-6x50/BT40 **	6	12	40		95	68	50				40	12 - 22	1.2	25 000
1		683080	HG PENCIL-8x50/BT40	8	14.5	40		95	68	50				40	27 - 40	1.2	25 000
1		683100	HG PENCIL-10x50/BT40	10	17	40		95	68	50				40	35 - 70	1.2	25 000
1		683090	HG PENCIL-10x100/BT40	10	17	40		145	118	100				40	35 - 70	1.3	15 000
1		683160	HG PENCIL-12x50/BT40	12	19.5	40		95	68	50				40	60 - 125	1.2	25 000
1		683170	HG PENCIL-12x100/BT40	12	19.5	40		145	118	100				40	60 - 125	1.3	15 000
2		683110	HG PENCIL-12x150/BT40	12	19.5	40	24.5	195	168	150	75	50		40	60 - 125	1.6	10 000
4		683115	HG PENCIL-12x150/BT40 D4	12	18	40	33.3	195	168	150			3	40	60 - 125	1.6	10 000
1		683130	HG PENCIL-16x75/BT40	16	26	40		120	93	75				50	165 - 270	1.4	15 000
1		683120	HG PENCIL-16x125/BT40	16	26	40		170	143	125				50	165 - 270	1.6	10 000
3		683150	HG PENCIL-20x110/BT40	20	32	40		155	128	110	60			52	260 - 425	1.8	20 000
4		683155	HG PENCIL-20x110/BT40 D4	20	28	40	39.5	155	128	110			3	52	260 - 425	1.8	20 000
3		683140	HG PENCIL-20x190/BT40	20	32	40		235	208	190	60			52	260 - 425	2.4	10 000
4		683145	HG PENCIL-20x190/BT40 D4	20	28	40	37.9	235	208	190			1.5	52	260 - 425	2.4	10 000

Inch range

Technical Specification *BT 40 Form AD/B*

Design	Taper	Part no.	Item description	D1	D2	D3	D4	L1	L2	L3	L4	L5	v°	depth	T* ft·lb	Weight kg	G 2.5 at rpm
				Dimensions, inch													
1	40	683070-T	HG PENCIL-1/4"x50/BT40 **	0.250	0.472	1.575		3.740	2.677	1.969				1.575	13 - 20	1.2	25 000
1		683160-T	HG PENCIL-1/2"x50/BT40	0.500	0.768	1.575		3.740	2.677	1.969				1.575	50 - 105	1.2	25 000
1		683170-T	HG PENCIL-1/2"x100/BT40	0.500	0.768	1.575		5.709	4.646	3.937				1.575	50 - 105	1.3	15 000
2		683110-T	HG PENCIL-1/2"x150/BT40	0.500	0.768	1.575	0.965	7.677	6.614	5.906	2.953	1.969		1.575	50 - 105	1.6	10 000
3		683150-T	HG PENCIL-3/4"x110/BT40	0.750	1.260	1.575		6.102	5.039	4.331	2.362			2.047	192 - 314	1.8	20 000
3		683140-T	HG PENCIL-3/4"x190/BT40	0.750	1.260	1.575		9.252	8.189	7.480	2.362			2.047	192 - 314	2.4	10 000

**) T = Min. and Max. transmittable torque using a h6 cylindrical tool, full depth insert. For additional information see section Technical Information.*
***) Center thread, M5x0.8, for axial length adjustment screw (screw not included). Part no. S041.*

Information:
- Runout accuracy ≤ 0.004 mm at 2.5 x D1 (max. 50 mm),
  ≤ 0.00016 inch at 2.5x D1 (max. 1.969 inch)
  ≤ 0.007 mm at 2.5 x D1 at length L1 > 125 mm
  ≤ 0.00028 inch at 2.5x D1 at length L1 > 4.921 inch
- Tool shank h6 or h7 can be used
- Coolant through on all holders
- Bore for data carrier - available on request

Accessories:
Use preset Torque Wrench, 6 Nm, to ensure correct mounting of tools. Part no. 19050.

ETP HYDRO-GRIP PENCIL can be used with reducing sleeves.
For additional information see section Accessories.

ETP HYDRO-GRIP® PENCIL
BT 50 Form AD/B - JIS B 6339

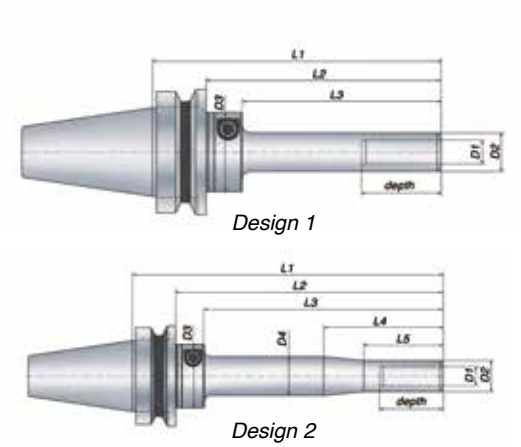

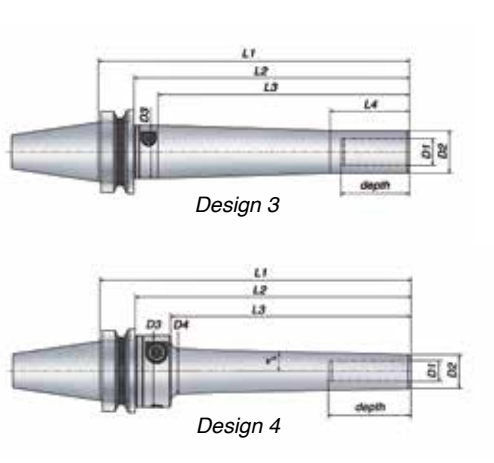

Metric range

Technical Specification *BT 50 Form AD/B*

Design	Taper	Part no.	Item description	Dimensions, mm D1	D2	D3	D4	L1	L2	L3	L4	L5	v°	depth	T* Nm	Weight kg	G 2.5 at rpm
1	50	684090	HG PENCIL 12x50/BT50	12	19.5	40		106	68	50				40	60 - 125	3.8	14 000
1		684100	HG PENCIL 12x100/BT50	12	19.5	40		156	118	100				40	60 - 125	3.9	14 000
2		684110	HG PENCIL 12x150/BT50	12	19.5	40	24.5	206	168	150	75	50		40	60 - 125	4.2	10 000
4		684115	HG PENCIL 12x150/BT50 D4	12	18	40	33.3	206	168	150			3	40	60 - 125	4.2	10 000
3		684140	HG PENCIL 20x110/BT50	20	32	40		166	128	110	60			52	260 - 425	4.4	14 000
4		684145	HG PENCIL 20x110/BT50 D4	20	28	40	39.5	166	128	110			3	52	260 - 425	4.4	14 000
3		684150	HG PENCIL 20x190/BT50	20	32	40		246	206.5	190	60			52	260 - 425	5	10 000
4		684155	HG PENCIL 20x190/BT50 D4	20	28	40	37.9	246	206.5	190			1.5	52	260 - 425	5	10 000

Inch range

Technical Specification *BT 50 Form AD/B*

Design	Taper	Part no.	Item description	Dimensions, inch D1	D2	D3	D4	L1	L2	L3	L4	L5	v°	depth	T* ft·lb	Weight kg	G 2.5 at rpm
1	50	684090-T	HG PENCIL 1/2"x50/BT50	0.500	0.768	1.575		4.173	2.677	1.969				1.575	50 - 105	3.8	14 000
1		684100-T	HG PENCIL 1/2"x100/BT50	0.500	0.768	1.575		6.142	4.646	3.937				1.575	50 - 105	3.9	14 000
2		684110-T	HG PENCIL 1/2"x150/BT50	0.500	0.768	1.575	0.965	8.110	6.614	5.906	2.953	1.969		1.575	50 - 105	4.2	10 000
3		684140-T	HG PENCIL 3/4"x110/BT50	0.750	1.260	1.575		6.535	5.039	4.331	2.362			2.047	192 - 314	4.4	14 000
3		684150-T	HG PENCIL 3/4"x190/BT50	0.750	1.260	1.575		9.685	8.130	7480	2.362			2.047	192 - 314	5	10 000

**) T = Min. and Max. transmittable torque using a h6 cylindrical tool, full depth insert. For additional information see section Technical Information.*

Information:
- Runout accuracy ≤ 0.004 mm at 2.5 x D1 (max. 50 mm),
  ≤ 0.00016 inch at 2.5x D1 (max. 1.969 inch)
  ≤ 0.007 mm at 2.5 x D1 at length L1 > 125 mm
  ≤ 0.00028 inch at 2.5x D1 at length L1 > 4.921 inch
- Tool shank h6 or h7 can be used
- Coolant through on all holders
- Bore for data carrier - available on request

Accessories:
Use preset Torque Wrench, 6 Nm, to ensure correct mounting of tools. Part no. 19050.

ETP HYDRO-GRIP PENCIL can be used with reducing sleeves.
For additional information see section Accessories.

ETP HYDRO-GRIP® PENCIL

BT Form AD - JIS B 6339 Dual Contact

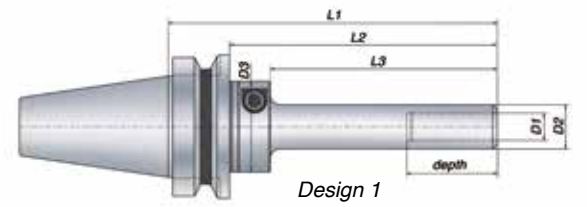

Design 1

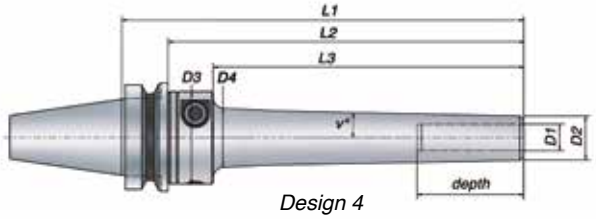

Design 4

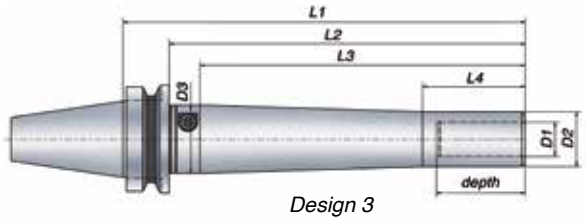

Design 3

Metric range

Technical Specification *BT Form AD Dual Contact*

Design	Taper	Part no.	Item description	D1	D2	D3	D4	L1	L2	L3	L4	L5	v°	depth	T* Nm	Weight kg	G 2.5 at rpm
				Dimensions, mm													
1	30	684700	HG PENCIL-12x50/DC-BT30	12	19.5	40		102	80	50				40	60 - 125	0.6	25 000
1		684710	HG PENCIL-12x100/DC-BT30	12	19.5	40		152	130	100				40	60 - 125	0.7	15 000
3		684930	HG PENCIL-20x110/DC-BT30	20	32	40		162	140	110	60			52	260 - 425	1.2	20 000
1	40	684730	HG PENCIL-12x50/DC-BT40	12	19.5	40		107	80	50				40	60 - 125	1.3	25 000
1		684740	HG PENCIL-12x100/DC-BT40	12	19.5	40		157	130	100				40	60 - 125	1.4	15 000
3		684760	HG PENCIL-20x110/DC-BT40	20	32	40		167	140	110	60			52	260 -425	1.9	20 000
4		684765	HG PENCIL-20x110/DC-BT40 D4	20	28	40	39.5	167	140	110			3	52	260 -425	1.9	20 000

Inch range

Technical Specification *BT Form AD Dual Contact*

Design	Taper	Part no.	Item description	D1	D2	D3	D4	L1	L2	L3	L4	L5	v°	depth	T* ft·lb	Weight kg	G 2.5 at rpm
				Dimensions, inch													
1	30	684700-T	HG PENCIL-1/2"x50/DC-BT30	0.500	0.768	1.575		4.016	3.150	1.969				1.575	55 - 105	0.6	25 000
1		684710-T	HG PENCIL-1/2"x100/DC-BT30	0.500	0.768	1.575		5.984	5.118	3.937				1.575	55 - 105	0.7	15 000
		684930-T	HG PENCIL-3/4"x110/DC-BT30	0.750	1.260	1.575		6.378	5.512	4.331	2.362			2.047	192 - 314	1.2	20 000
	40	684730-T	HG PENCIL-1/2"x50/DC-BT40	0.500	0.768	1.575		4.213	3.150	1.969				1.575	55 - 105	1.3	25 000
		684740-T	HG PENCIL-1/2"x100/DC-BT40	0.500	0.768	1.575		6.181	5.118	3.937				1.575	55 - 105	1.4	15 000
		684760-T	HG PENCIL-3/4"x110/DC-BT40	0.750	1.260	1.575		6.575	5.512	4.331	2.362			2.047	192 - 314	1.9	20 000
4		684765-T	HG PENCIL-3/4"x110/DC-BT40 D4	0.750	1.102	1.575	1.555	6.575	5.512	4.331			3	2.047	192 - 314	1.9	20 000

**) T = Min. and Max. transmittable torque using a h6 cylindrical tool, full depth insert. For additional information see section Technical Information.*

Information:
- Runout accuracy ≤ 0.004 mm at 2.5 x D1 (max. 50 mm),
  ≤ 0.00016 inch at 2.5x D1 (max. 1.969 inch)
  ≤ 0.007 mm at 2.5 x D1 at length L1 > 125 mm
  ≤ 0.00028 inch at 2.5x D1 at length L1 > 4.921 inch
- Tool shank h6 or h7 can be used
- Coolant through on all holders
- Bore for data carrier - available on request

Accessories:
Use preset Torque Wrench, 6 Nm, to ensure correct mounting of tools. Part no. 19050.

ETP HYDRO-GRIP PENCIL can be used with reducing sleeves.
For additional information see section Accessories.

ETP HYDRO-GRIP® CAT Form AD/B - ASME B5.50

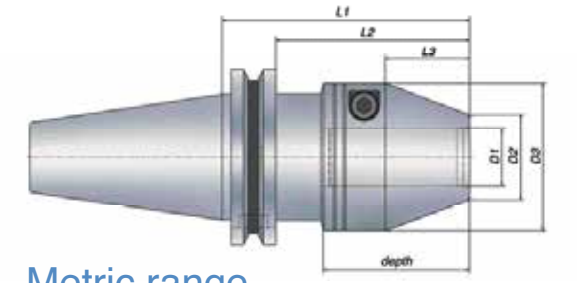

Metric range

Technical Specification *CAT Form AD/B*

Taper	Part no.	Item description	D1	D2	D3	L1	L2	L3	depth	T* Nm	Weight kg	G 2.5 at rpm
			Dimensions, mm									
40	685470	HG-12/CAT40	12	22	43.5	56	36.95	18	40	60-125	1.1	25 000
	685480	HG-12x100/CAT40	12	22	43.5	100	80.95	18	40	60-125	1.6	25 000
	685490	HG-16/CAT40	16	26	48	86	66.95	28	50	165-270	1.5	25 000
	685500	HG-16x125/CAT40	16	26	48	125	105.95	28	50	165-270	2	25 000
	685510	HG-20/CAT40	20	30	52	88	68.95	30	52	260-425	1.5	25 000
	685520	HG-20x125/CAT40	20	30	52	125	105.95	30	52	260-425	2.1	25 000
	685530	HG-25/CAT40	25	35	59	93	73.95	34	56	480-710	1.7	25 000
	705911	HG-32/CAT40	32	42	69.5	104	84.95	38	60	820 - 1250	2.2	25 000
50	685540	HG-12/CAT50	12	22	43.5	56	36.95	18	40	60-125	2.8	14 000
	685550	HG-12x100/CAT50	12	22	43.5	100	80.95	18	40	60-125	3.2	14 000
	685560	HG-16/CAT50	16	26	48	66	46.95	28	50	165-270	3	14 000
	685570	HG-16x125/CAT50	16	26	48	125	105.95	28	50	165-270	3.5	14 000
	685580	HG-20/CAT50	20	30	52	68	48.95	30	52	260-425	3	14 000
	685590	HG-20x150/CAT50	20	30	52	150	130.95	30	52	260-425	4.4	14 000
	685600	HG-25/CAT50	25	35	59	72	52.95	34	56	480-710	3.2	14 000
	685610	HG-25x150/CAT50	25	35	59	150	130.95	34	56	480-710	4.8	14 000
	685620	HG-32/CAT50	32	42	69.5	77	57.95	38	60	820-1250	3.5	14 000

Inch range

● From stock
○ On request

Technical Specification *CAT Form AD/B*

Taper	Part no.	Item description	D1	D2	D3	L1	L2	L3	depth	T* ft·lb	Weight kg	G 2.5 at rpm
			Dimensions, inch									
40	685470-T	HG-1/2”/CAT40	0.500	0.866	1.713	2.205	1.455	0.709	1.575	55-105	1.1	25 000
	685480-T	HG-1/2”x100/CAT40	0.500	0.866	1.713	3.937	3.187	0.709	1.575	55-105	1.6	25 000
	685510-T	HG-3/4”/CAT40	0.750	1.181	2.047	3.465	2.715	1.181	2.047	192-314	1.5	25 000
	682410-T	HG-3/4”x4”/CAT40	0.750	1.181	2.047	4.000	3.250	1.181	2.047	192-314	2.1	25 000
	685520-T	HG-3/4”x125/CAT40	0.750	1.181	2.047	4.921	4.171	1.181	2.047	192-314	2.1	25 000
	682420-T	HG-3/4”x6”/CAT40	0.750	1.181	2.047	6.000	5.250	1.181	2.047	192-314	2.6	25 000
	685530-T	HG-1”/CAT40	1.000	1.378	2.323	3.661	2.911	1.339	2.205	354-524	1.7	25 000
	705911-T	HG-1 1/4”/CAT40	1.250	1.654	2.736	4.094	3.344	1.496	2.362	605 - 922	2.2	25 000
50	685580-T	HG-3/4”/CAT50	0.750	1.181	2.047	2.677	1.927	1.181	2.047	192-314	3	14 000
	682460-T	HG-3/4”x4”/CAT50	0.750	1.181	2.047	4.000	3.250	1.181	2.047	192-314	3.6	14 000
	682470-T	HG-3/4”x6”/CAT50	0.750	1.181	2.047	6.000	5.250	1.181	2.047	192-314	4.4	14 000
	685600-T	HG-1”/CAT50	1.000	1.378	2.323	2.835	2.085	1.339	2.205	354-524	3.2	14 000
	682480-T	HG-1”x4”/CAT50	1.000	1.378	2.323	4.000	3.250	1.339	2.205	354-524	3.8	14 000
	682490-T	HG-1”x6”/CAT50	1.000	1.378	2.323	6.000	5.250	1.339	2.205	354-524	4.9	14 000
	685620-T	HG-1 1/4”/CAT50	1.250	1.654	2.736	3.031	2.281	1.496	2.362	605-922	3.5	14 000
	816496	HG-1 1/4”x12”/CAT50	1.250	1.654	2.736	12.000	11.250	1.496	2.362	605-922	10.3	14 000

**) T = Min. and Max. transmittable torque using a h6 cylindrical tool, full depth insert. For additional information see section Technical Information.*

Information:
- Runout accuracy ≤ 0.004 mm at 2.5 x D1 (max. 50 mm), ≤ 0.00016 inch at 2.5x D1 (max. 1.969 inch)
- Tool shank h6 or h7 can be used
- Center thread, Part no. S057-M8x1.25, for axial length adjustment screw (screw not included)
- Coolant through on all holders
- Bore for data carrier

Accessories:
Use preset Torque Wrench, 6 Nm, to ensure correct mounting of tools. Part no. 19050.

ETP HYDRO-GRIP can be used with reducing sleeves.
For additional information see section Accessories.

ETP HYDRO-GRIP®
CAT Form AD/B - ASME B5.50 Dual Contact

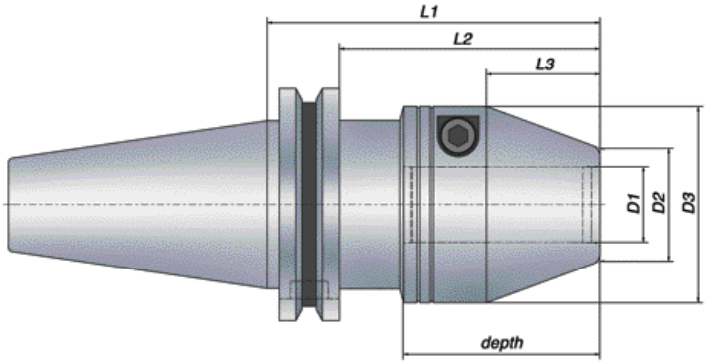

Metric range

Technical Specification *CAT Form AD/B Dual Contact*

			Dimensions, mm									
Taper	**Part no.**	**Item description**	***D1***	***D2***	***D3***	***L1***	***L2***	***L3***	***depth***	***T* Nm***	***Weight kg***	***G 2.5 at rpm***
40	681480	HG-20/DC-CAT40	20	30	52	88	68.95	30	52	260 - 425	1.5	25 000

Inch range

Technical Specification *CAT Form AD/B Dual Contact*

			Dimensions, inch									
Taper	**Part no.**	**Item description**	***D1***	***D2***	***D3***	***L1***	***L2***	***L3***	***depth***	***T* ft·lb***	***Weight kg***	***G 2.5 at rpm***
40	681480-T	HG-3/4"/DC-CAT40	0.750	1.181	2.047	3.465	2.715	1.181	2.047	192 - 314	1.5	25 000
	681490-T	HG-1"/DC-CAT40	1.000	1.378	2.323	3.661	2.911	1.339	2.205	354-524	1.7	25 000

**) T = Min. and Max. transmittable torque using a h6 cylindrical tool, full depth insert. For additional information see section Technical Information.*

Information:
- Runout accuracy ≤ 0.004 mm at 2.5 x D1 (max. 50 mm), ≤ 0.00016 inch at 2.5x D1 (max. 1.969 inch)
- Tool shank h6 or h7 can be used
- Center thread, Part no. S057-M8x1.25, for axial length adjustment screw (screw not included)
- Coolant through on all holders
- Bore for data carrier

Accessories:
Use preset Torque Wrench, 6 Nm, to ensure correct mounting of tools. Part no. 19050.

ETP HYDRO-GRIP can be used with reducing sleeves.
For additional information see section Accessories.

ETP HYDRO-GRIP® HD
CAT Form AD/B - ASME B5.50

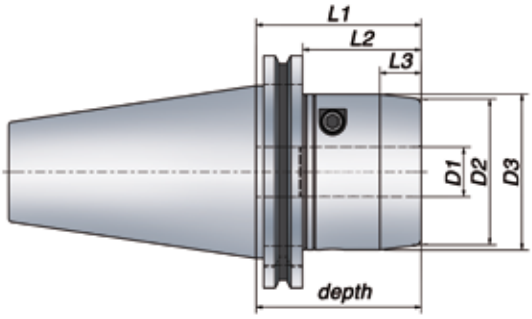

Metric range

Technical Specification *CAT Form AD/B*

Taper	Part no.	Item description	D1	D2	D3	L1	L2	L3	depth	T* Nm	Weight kg	G 2.5 at rpm	
			Dimensions, mm										
40	682110	HG HD-20/CAT40	20	59	63	90	70.95	17	90	400-535	2	25 000	*Dual Contact*
	682350	HG HD-20/DC-CAT40	20	59	63	90	70.95	17	90	400-535	2	25 000	
	706006	HG HD-25/CAT40	25	70	74	100	80.95	17	56	740 - 940	2.7	25 000	
50	682120	HG HD-20/CAT50	20	59	63	68	48.95	17	68	400-535	3.6	14 000	
	682130	HG HD-25/CAT50	25	70	74	92	72.95	17	92	740-940	4.6	14 000	
	682140	HG HD-32/CAT50	32	76	80	97	77.95	17	97	1325-1670	4.8	14 000	

Inch range

Technical Specification *CAT Form AD/B*

Taper	Part no.	Item description	D1	D2	D3	L1	L2	L3	depth	T* ft·lb	Weight kg	G 2.5 at rpm	
			Dimensions, inch										
40	682110-T	HG HD-3/4”/CAT40	0.750	2.323	2.480	3.543	2.793	0.669	3.543	295-395	2	25 000	
	682350-T	HG HD-3/4”/DC-CAT40	0.750	2.323	2.480	3.543	2.793	0.669	3.543	295-395	2	25 000	*Dual Contact*
	706006-T	HG HD-1”/CAT40	1.000	2.756	2.913	3.937	3.187	0.669	2.205	546 - 693	2.7	25 000	
50	682120-T	HG HD-3/4”/CAT50	0.750	2.323	2.480	2.677	1.927	0.669	2.677	295-395	3.6	14 000	
	682130-T	HG HD-1”/CAT50	1.000	2.756	2.913	3.622	2.872	0.669	3.622	546-693	4.6	14 000	
	682140-T	HG HD-1 1/4”/CAT50	1.250	2.992	3.150	3.819	3.069	0.669	3.819	977-1232	4.8	14 000	

**) T = Min. and Max. transmittable torque using a h6 cylindrical tool, full depth insert. For additional information see section Technical Information.*

Information:
- Runout accuracy ≤ 0.004 mm at 2.5 x D1 (max. 50 mm), ≤ 0.00016 inch at 2.5x D1 (max. 1.969 inch)
- Tool shank h6 or h7 can be used
- Center thread, M12x1, for axial length adjustment screw (screw not included). Part no. S042
- Coolant through on all holders
- Bore for data carrier - available on request

Accessories:
Use preset Torque Wrench, 10 Nm, to ensure correct mounting of tools. Part no. 19052.

ETP HYDRO-GRIP HD can be used with reducing sleeves.
For additional information see section Accessories.

ETP HYDRO-GRIP® SLENDER
CAT Form AD/B - ASME B5.50

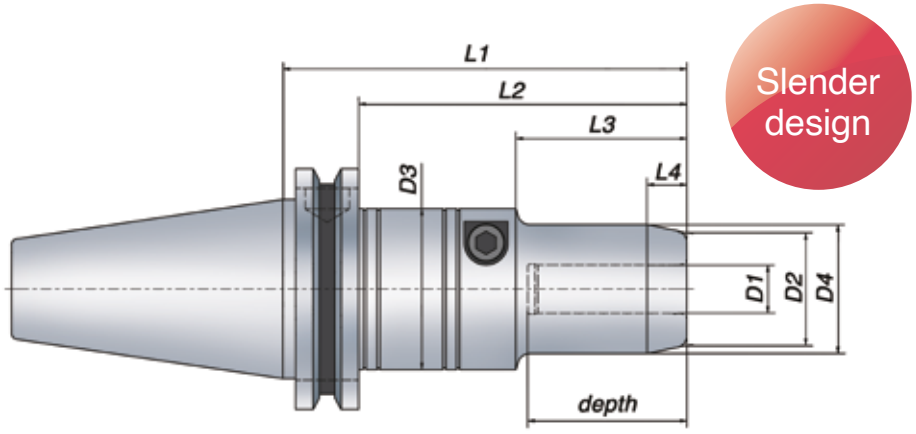

Metric range

Technical Specification *CAT Form AD/B*

Taper	Part no.	Item description	D1	D2	D3	D4	L1	L2	L3	L4	depth	T* Nm	Weight kg	G 2.5 at rpm
			Dimensions, mm											
40	681600	HG SLENDER-12x4"/CAT40	12	28	40	32	101.6	82.55	43	10	40	60-125	1.4	25 000
	681610	HG SLENDER-12x6"/CAT40	12	28	40	32	152.4	133.35	43	10	40	60-125	1.9	25 000
	681620	HG SLENDER-16x4"/CAT40	16	34	40	38	101.6	82.55	43	10	40	165-270	1.5	25 000
	681630	HG SLENDER-16x6"/CAT40	16	34	40	38	152.4	133.35	43	10	40	165-270	2	25 000

Inch range

Technical Specification *CAT Form AD/B*

Taper	Part no.	Item description	D1	D2	D3	D4	L1	L2	L3	L4	depth	T* ft·lb	Weight kg	G 2.5 at rpm
			Dimensions, inch											
40	681600-T	HG SLENDER-1/2"x4/CAT40	0.500	1.102	1.575	1.260	4.000	3.250	1.693	0.393	1.575	55-105	1.4	25 000
	681610-T	HG SLENDER-1/2"x6"/CAT40	0.500	1.102	1.575	1.260	6.000	5.250	1.693	0.393	1.575	55-105	1.9	25 000
	681620-T	HG SLENDER-5/8"x4"/CAT40	0.625	1.339	1.575	1.496	4.000	3.250	1.693	0.393	1.575	122-199	1.5	25 000
	681630-T	HG SLENDER-5/8"x6"/CAT40	0.625	1.339	1.575	1.496	6.000	5.250	1.693	0.393	1.575	122-199	2	25 000
50	681740-T	HG SLENDER-3/4"x4"/CAT50	0.750	1.417	1.969	1.575	4.000	3.250	2.165	0.393	2.047	192-314	3.4	25 000
	681750-T	HG SLENDER-3/4"x6"/CAT50	0.750	1.417	1.969	1.575	6.000	5.250	2.165	0.393	2.047	192-314	4.1	25 000

**) T = Min. and Max. transmittable torque using a h6 cylindrical tool, full depth insert. For additional information see section Technical Information.*

Information:
- Runout accuracy ≤ 0.004 mm at 2.5 x D1 (max. 50 mm), ≤ 0.00016 inch at 2.5x D1 (max. 1.969 inch)
- Tool shank h6 or h7 can be used
- Center thread, Part no. S057-M8x1.25 for axial length adjustment screw (screw not included)

Accessories:
Use preset Torque Wrench, 6 Nm, to ensure correct mounting of tools. Part no. 19050.

ETP HYDRO-GRIP SLENDER can be used with reducing sleeves.
For additional information see section Accessories.

ETP HYDRO-GRIP® PENCIL

CAT 40 Form AD/B - ASME B5.50

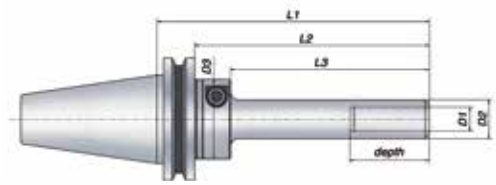

Design 1

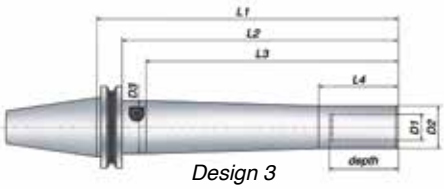

Design 3

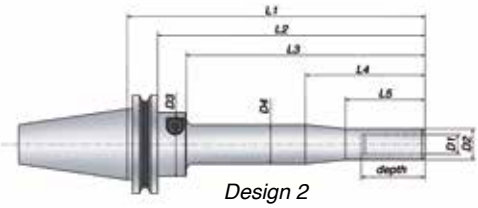

Design 2

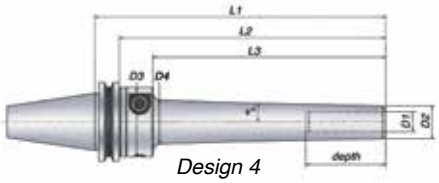

Design 4

Slim and long reach

Metric range

Technical Specification *CAT 40 Form AD/B*

Design	Taper	Part no.	Item description	Dimensions, mm D1	D2	D3	D4	L1	L2	L3	L4	L5	v°	depth	T* Nm	Weight kg	G 2.5 at rpm
1	40	683561	HG PENCIL-6x50/CAT40 **	6	12	40		88	68.95	50				40	12 - 22	1	25 000
1		683570	HG PENCIL-8x50/CAT40	8	14.5	40		88	68.95	50				40	27 - 40	1	25 000
1		683590	HG PENCIL-10x50/CAT40	10	17	40		88	68.95	50				40	35 - 70	1	25 000
1		683580	HG PENCIL-10x100/CAT40	10	17	40		138	118.95	100				40	35 - 70	1.1	15 000
1		683650	HG PENCIL-12x50/CAT40	12	19.5	40		88	68.95	50				40	60 - 125	1	25 000
1		683600	HG PENCIL-12x100/CAT40	12	19.5	40		138	118.95	100				40	60 - 125	1.1	15 000
2		683610	HG PENCIL-12x150/CAT40	12	19.5	40	24.5	188	168.95	150	75	50		40	60 - 125	1.4	10 000
4		683615	HG PENCIL-12x150/CAT40 D4	12	18	40	33.3	188	168.95	150			3	40	60 - 125	1.4	10 000
1		683630	HG PENCIL-16x75/CAT40	16	26	40		113	93.95	75				50	165 - 270	1.2	15 000
1		683620	HG PENCIL-16x125/CAT40	16	26	40		163	143.95	125				50	165 - 270	1.4	10 000
3		683660	HG PENCIL-20x110/CAT40	20	32	40		148	128.95	110	60			52	260 - 425	1.6	20 000
4		683665	HG PENCIL-20x110/CAT40 D4	20	28	40	39.5	148	128.95	110			3	52	260 - 425	1.6	20 000
3		683640	HG PENCIL-20x190/CAT40	20	32	40		228	208.95	190	60			52	260 - 425	2.3	10 000
4		683645	HG PENCIL-20x190/CAT40 D4	20	28	40	37.9	228	208.95	190			1.5	52	260 - 425	2.3	10 000

Inch range

Technical Specification *CAT 40 Form AD/B*

Design	Taper	Part no.	Item description	Dimensions, inch D1	D2	D3	D4	L1	L2	L3	L4	L5	v°	depth	T* ft·lb	Weight kg	G 2.5 at rpm
1	40	683561-T	HG PENCIL-1/4"x50/CAT40 **	0.250	0.472	1.575		3.465	2.715	1.969				1.575	13 - 20	1	25 000
1		683650-T	HG PENCIL-1/2"x50/CAT40	0.500	0.768	1.575		3.465	2.715	1.969				1.575	55 - 105	1	25 000
1		683600-T	HG PENCIL-1/2"x100/CAT40	0.500	0.768	1.575		5.433	4.683	3.937				1.575	55 - 105	1.1	15 000
2		683610-T	HG PENCIL-1/2"x150/CAT40	0.500	0.768	1.575	0.965	7.402	6.652	5.906	2.953	1.969		1.575	55 - 105	1.4	10 000
4		683615-T	HG PENCIL-1/2"x150/CAT40 D4	0.500	0.709	1.575	1.311	7.402	6.652	5.906			3	1.575	55 - 105	1.4	10 000
3		683660-T	HG PENCIL-3/4"x110/CAT40	0.750	1.260	1.575		5.827	5.077	4.331	2.362			2.047	192 -314	1.6	20 000
4		683665-T	HG PENCIL-3/4"x110/CAT40 D4	0.750	1.102	1.575	1.555	5.827	5.077	4.331			3	2.047	192 -314	1.6	20 000
3		683640-T	HG PENCIL-3/4"x190/CAT40	0.750	1.260	1.575		8.976	8.226	7.480	2.362			2.047	192 -314	2.3	10 000
4		683645-T	HG PENCIL-3/4"x190/CAT40 D4	0.750	1.102	1.575	1.492	8.976	8.226	7.480			1.5	2.047	192 -314	2.3	10 000

**) T = Min. and Max. transmittable torque using a h6 cylindrical tool, full depth insert. For additional information see section Technical Information.*
***) Center thread, M5x0.8, for axial length adjustment screw (screw not included). Part no. S041.*

Information:
- Runout accuracy ≤ 0.004 mm at 2.5 x D1 (max. 50 mm),
  ≤ 0.00016 inch at 2.5x D1 (max. 1.969 inch)
  ≤ 0.007 mm at 2.5 x D1 at length L1 > 125 mm
  ≤ 0.00028 inch at 2.5x D1 at length L1 > 4.921 inch
- Tool shank h6 or h7 can be used
- Coolant through on all holders
- Bore for data carrier

Accessories:
Use preset Torque Wrench, 6 Nm, to ensure correct mounting of tools. Part no. 19050.

ETP HYDRO-GRIP PENCIL can be used with reducing sleeves.
For additional information see section Accessories.

ETP HYDRO-GRIP® PENCIL

CAT 50 Form AD/B - ASME B5.50

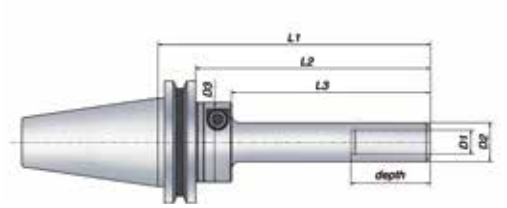

Design 1

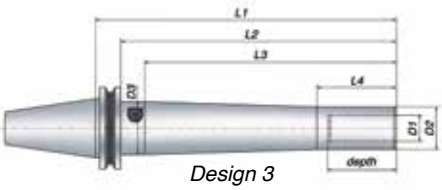

Design 3

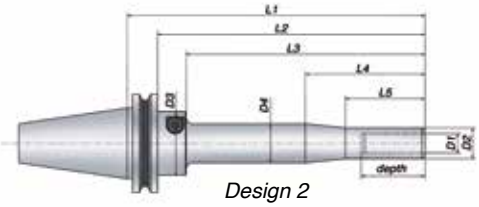

Design 2

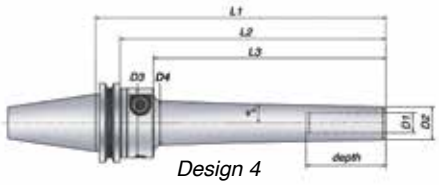

Design 4

Slim and long reach

Metric range

Technical Specification *CAT 50 Form AD/B*

Design	Taper	Part no.	Item description	D1	D2	D3	D4	L1	L2	L3	L4	L5	v°	depth	T* Nm	Weight kg	G 2.5 at rpm
				Dimensions, mm													
1	50	684290	HG PENCIL 12x50/CAT50	12	19.5	40		88	68.95	50				40	60 - 125	2.9	14 000
1		684300	HG PENCIL 12x100/CAT50	12	19.5	40		138	118.95	100				40	60 - 125	3	14 000
2		684310	HG PENCIL 12x150/CAT50	12	19.5	40	24.5	188	168.95	150	75	50		40	60 - 125	3.2	10 000
4		684315	HG PENCIL 12x150/CAT50 D4	12	18	40	33.3	188	168.95	150			3	40	60 - 125	3.2	10 000
3		684340	HG PENCIL 20x110/CAT50	20	32	40		148	128.95	110	60			52	260 - 425	3.4	14 000
4		684345	HG PENCIL 20x110/CAT50 D4	20	28	40	39.5	148	128.95	110			3	52	260 - 425	3.4	14 000
3		684350	HG PENCIL 20x190/CAT50	20	32	40		228	208.95	190	60			52	260 - 425	4.1	10 000
4		684355	HG PENCIL 20x190/CAT50 D4	20	28	40	37.9	228	208.95	190			1.5	52	260 - 425	4.1	10 000

Inch range

Technical Specification *CAT 50 Form AD/B*

Design	Taper	Part no.	Item description	D1	D2	D3	D4	L1	L2	L3	L4	L5	v°	depth	T* ft·lb	Weight kg	G 2.5 at rpm
				Dimensions, inch													
1	50	684290-T	HG PENCIL 1/2"x50/CAT50	0.500	0.768	1.575		3.465	2.715	1.969				1.575	55 - 105	2.9	14 000
1		684300-T	HG PENCIL 1/2"x100/CAT50	0.500	0.768	1.575		5.433	4.683	3.937				1.575	55 - 105	3	14 000
2		684310-T	HG PENCIL 1/2"x150/CAT50	0.500	0.768	1.575	0.965	7.402	6.652	5.906	2.953	1.969		1.575	55 - 105	3.2	10 000
4		684315-T	HG PENCIL 1/2"x150/CAT50 D4	0.500	0.709	1.575	1.311	7.402	6.652	5.906			3	1.575	55 - 105	3.2	10 000
3		684340-T	HG PENCIL 3/4"x110/CAT50	0.750	1.260	1.575		5.827	5.077	4.331	2.362			2.047	192 -314	3.4	14 000
4		684345-T	HG PENCIL 3/4"x110/CAT50 D4	0.750	1.102	1.575	1.555	5.827	5.077	4.331			3	2.047	192 -314	3.4	14 000
3		684350-T	HG PENCIL 3/4"x190/CAT50	0.750	1.260	1.575		8.976	8.226	7.480	2.362			2.047	192 -314	4.1	10 000
4		684355-T	HG PENCIL 3/4"x190/CAT50 D4	0.750	1.102	1.575	1.492	8.976	8.226	7.480			1.5	2.047	192 -314	4.1	10 000

**) T = Min. and Max. transmittable torque using a h6 cylindrical tool, full depth insert. For additional information see section Technical Information.*
***) Center thread, M5x0.8, for axial length adjustment screw (screw not included). Part no. S041.*

Information:
- Runout accuracy ≤ 0.004 mm at 2.5 x D1 (max. 50 mm),
  ≤ 0.00016 inch at 2.5x D1 (max. 1.969 inch)
  ≤ 0.007 mm at 2.5 x D1 at length L1 > 125 mm
  ≤ 0.00028 inch at 2.5x D1 at length L1 > 4.921 inch
- Tool shank h6 or h7 can be used
- Coolant through on all holders
- Bore for data carrier

Accessories:
Use preset Torque Wrench, 6 Nm, to ensure correct mounting of tools. Part no. 19050.

ETP HYDRO-GRIP PENCIL can be used with reducing sleeves.
For additional information see section Accessories.

ETP HYDRO-GRIP® PENCIL

CAT Form AD/B - ASME B5.50 Dual Contact

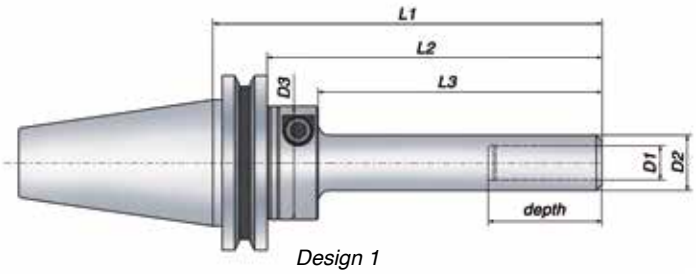

Design 1

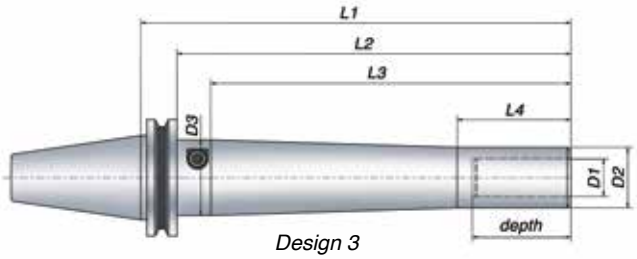

Design 3

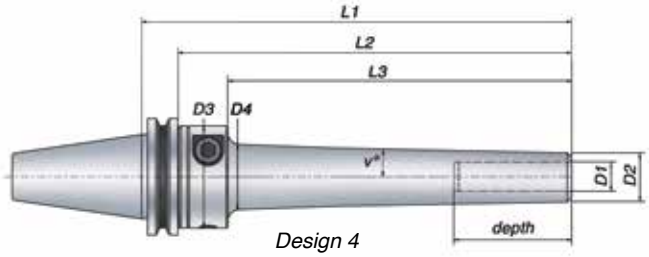

Design 4

Metric range

Technical Specification *CAT Form AD/B Dual Contact*

Design	Taper	Part no.	Item description	Dimensions, mm D1	D2	D3	D4	L1	L2	L3	L4	L5	v°	depth	T* Nm	Weight kg	G 2.5 at rpm
1	40	684830	HG PENCIL-12x50/DC-CAT40	12	19.5	40		100	80.95	50				40	60 - 125	1.2	25 000
1		684840	HG PENCIL-12x100/DC-CAT40	12	19.5	40		150	130.95	100				40	60 - 125	1.3	15 000
3		684860	HG PENCIL-20x110/DC-CAT40	20	32	40		160	140.95	110	60			52	260 - 425	1.8	20 000
4		684865	HG PENCIL-20x110/DC-CAT40 D4	20	28	40	39.5	160	140.95	110			3	52	260 - 425	1.8	20 000

Inch range

● From stock
○ On request

Technical Specification *CAT Form AD/B Dual Contact*

Design	Taper	Part no.	Item description	Dimensions, inch D1	D2	D3	D4	L1	L2	L3	L4	L5	v°	depth	T* ft·lb	Weight kg	G 2.5 at rpm
1	40	684830-T	HG PENCIL-1/2"x50/DC-CAT40	0.500	0.768	1.575		3.937	3.187	1.969				1.575	55 - 105	1.2	25 000
1		684840-T	HG PENCIL-1/2"x100/DC-CAT40	0.500	0.768	1.575		5.906	5.156	3.937				1.575	55 - 105	1.3	15 000
3		684860-T	HG PENCIL-3/4"x110/DC-CAT40	0.750	1.220	1.575		6.299	5.549	4.331	2.362			2.047	192 -314	1.8	20 000
4		684865-T	HG PENCIL-3/4"x110/DC-CAT40 D4	0.750	1.102	1.575	1.555	6.299	5.549	4.331			3	2.047	192 -314	1.8	20 000

) T = Min. and Max. transmittable torque using a h6 cylindrical tool, full depth insert. For additional information see section Technical Information.

Information:
- Runout accuracy ≤ 0.004 mm at 2.5 x D1 (max. 50 mm),
  ≤ 0.00016 inch at 2.5x D1 (max. 1.969 inch)
  ≤ 0.007 mm at 2.5 x D1 at length L1 > 125 mm
  ≤ 0.00028 inch at 2.5x D1 at length L1 > 4.921 inch
- Tool shank h6 or h7 can be used
- Coolant through on all holders
- Bore for data carrier

Accessories:
Use preset Torque Wrench, 6 Nm, to ensure correct mounting of tools. Part no. 19050.

ETP HYDRO-GRIP can be used with reducing sleeves.
For additional information see section Accessories.

ETP HYDRO-GRIP®
PSK Form - ISO 26623-1

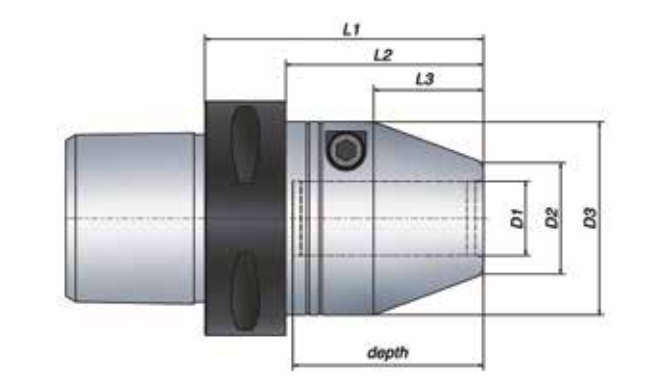

Metric range

Technical Specification *PSK Form*

Coupling size	Part no.	Item description	Dimensions, mm D1	D2	D3	L1	L2	L3	depth	T* Nm	Weight kg	G 2.5 at rpm
**) C3	701558	HG-12/C3 (no gripper)	12	22	43.5	50	43	18	40	60-125	0.4	25 000
**) C4	703430	HG-12/C4 (no gripper)	12	22	43.5	50	43	18	40	60-125	0.5	25 000
C4	685160	HG-12/C4	12	22	43.5	62	43	18	40	60-125	0.6	25 000
	685170	HG-12x100/C4	12	22	43.5	100	80	18	40	60-125	1	25 000
	685180	HG-16/C4	16	26	48	72	52	28	50	165-270	0.7	25 000
	685190	HG-16x125/C4	16	26	48	125	105	28	50	165-270	1.2	25 000
	685200	HG-20/C4	20	30	52	75	55	30	52	260-425	0.8	25 000
	685210	HG-20x125/C4	20	30	52	125	105	30	52	260-425	1.6	25 000
C5	685220	HG-12/C5	12	22	43.5	62	42	18	40	60-125	0.8	25 000
	685230	HG-12x100/C5	12	22	43.5	100	80	18	40	60-125	1.2	25 000
	685240	HG-16/C5	16	26	48	72	52	28	50	165-270	1	25 000
	685250	HG-16x125/C5	16	26	48	125	105	28	50	165-270	1.5	25 000
	685260	HG-20/C5	20	30	52	74	54	30	52	260-425	1	25 000
	685270	HG-20x125/C5	20	30	52	125	105	30	52	260-425	1.8	25 000
	685280	HG-25/C5	25	35	59	79	59	34	56	480-710	1.2	25 000
	639120	HG SLENDER-25/C5	25	45	50	97	59	10	56	480-710	1.3	25 000

Inch range

Technical Specification *PSK Form*

Coupling size	Part no.	Item description	Dimensions, inch D1	D2	D3	L1	L2	L3	depth	T* ft·lb	Weight kg	G 2.5 at rpm
C4	685200-T	HG-3/4"/C4	0.750	1.181	2.047	2.953	2.165	1.181	2.047	192-314	0.8	25 000
C5	685280-T	HG-1"/C5	1.000	1.378	2.323	3.110	2.323	1.339	2.205	354-524	1.2	25 000
	639120-T	HG SLENDER-1"/C5	1.000	1.772	1.969	3.819	2.323	0.394	2.205	354-524	1.3	25 000

**) T = Min. and Max transmittable torque using a h6 cylindrical tool, full depth insert. For additional information see section Technical Information.*
Additional PSK Inch equivalents add " -T" to metric part no. Available on request.
***) Short version with no gripper grooves.*

Information:
- Runout accuracy ≤ 0.004 mm at 2.5 x D1 (max. 50 mm), ≤ 0.00016 inch at 2.5x D1 (max. 1.969 inch)
- Tool shank h6 or h7 can be used
- Center thread, Part no. S057-M8x1.25, for axial length adjustment screw (screw not included)
- Coolant through on all holders
- Bore for data carrier

Accessories:
Use preset Torque Wrench, 6 Nm, to ensure correct mounting of tools. Part no. 19050.

ETP HYDRO-GRIP can be used with reducing sleeves.
For additional information see section Accessories.

HYDRO-GRIP

ETP HYDRO-GRIP®

PSK Form - ISO 26623-1

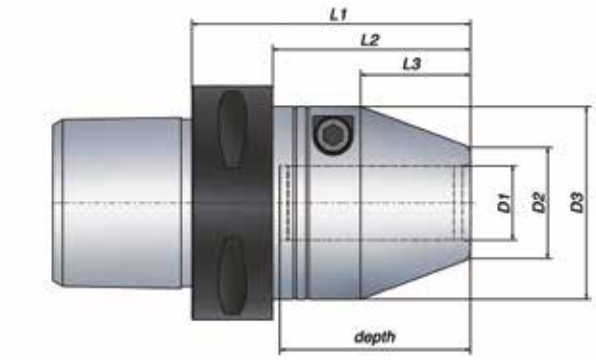

Metric range

Technical Specification *PSK Form*

Coupling size	Part no.	Item description	D1	D2	D3	L1	L2	L3	depth	T* Nm	Weight kg	G 2.5 at rpm
			Dimensions, mm									
C6	685290	HG-12/C6	12	22	43.5	64	42	18	40	60-125	1.1	25 000
	685300	HG-12x100/C6	12	22	43.5	100	78	18	40	60-125	1.5	25 000
	685310	HG-16/C6	16	26	48	74	52	28	50	165-270	1.2	25 000
	685320	HG-16x125/C6	16	26	48	125	103	28	50	165-270	1.7	25 000
	685330	HG-20/C6	20	30	52	76	54	30	52	260-425	1.3	25 000
	685340	HG-20x150/C6	20	30	52	150	128	30	52	260-425	2.5	25 000
	685350	HG-25/C6	25	35	59	80	58	34	56	480-710	1.5	25 000
	685360	HG-25x150/C6	25	35	59	150	128	34	56	480-710	3	25 000
	685370	HG-32/C6	32	42	69.5	84	62	38	60	820-1250	1.8	25 000
C8	685380	HG-12/C8	12	22	43.5	67	37	18	40	60-125	2.1	14 000
	685390	HG-12x100/C8	12	22	43.5	100	70	18	40	60-125	2.5	14 000
	685400	HG-16/C8	16	26	48	77	47	28	50	165-270	2.2	14 000
	685410	HG-16x125/C8	16	26	48	125	95	28	50	165-270	2.7	14 000
	685420	HG-20/C8	20	30	52	79	49	30	52	260-425	2.3	14 000
	685430	HG-20x150/C8	20	30	52	150	120	30	52	260-425	3.4	14 000
	685440	HG-25/C8	25	35	59	83	53	34	56	480-710	2.4	14 000
	685450	HG-25x150/C8	25	35	59	150	120	34	56	480-710	3.8	14 000
	685460	HG-32/C8	32	42	69.5	87	57	38	60	820-1250	2.7	14 000

Inch range

Technical Specification *PSK Form*

Coupling size	Part no.	Item description	D1	D2	D3	L1	L2	L3	depth	T* Nm	Weight kg	G 2.5 at rpm
			Dimensions, inch									
C6	685290-T	HG-1/2”/C6	0.500	0.866	1.713	2.520	1.654	0.709	1.575	55-105	1.1	25 000
	685330-T	HG-3/4”/C6	0.750	1.181	2.047	2.992	2.126	1.181	2.047	192-314	1.3	25 000
	685350-T	HG-1”/C6	1.000	1.378	2.323	3.150	2.283	1.339	2.205	354-524	1.5	25 000

**) T = Min. and Max transmittable torque using a h6 cylindrical tool, full depth insert. For additional information see section Technical Information.*

Additional PSK Inch equivalents add ” -T” to metric part no. Available on request.

Information:

- Runout accuracy ≤ 0.004 mm at 2.5 x D1 (max. 50 mm), ≤ 0.00016 inch at 2.5x D1 (max. 1.969 inch)
- Tool shank h6 or h7 can be used
- Center thread, Part no. S057-M8x1.25, for axial length adjustment screw (screw not included)
- Coolant through on all holders
- Bore for data carrier

Accessories:

Use preset Torque Wrench, 6 Nm, to ensure correct mounting of tools. Part no. 19050.

ETP HYDRO-GRIP can be used with reducing sleeves.
For additional information see section Accessories.

ETP HYDRO-GRIP® HD
PSK Form - ISO 26623-1

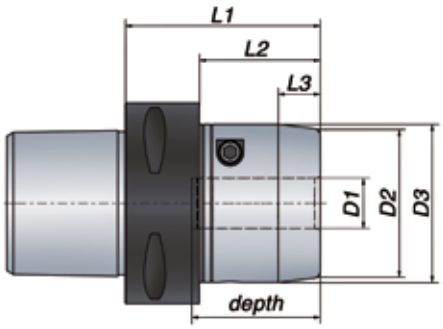

Metric range

Technical Specification *PSK Form*

Coupling size	Part no.	Item description	Dimensions, mm D1	D2	D3	L1	L2	L3	depth	T* Nm	Weight kg	G 2.5 at rpm
C5	682040	HG HD-20/C5	20	59	63	79	59	17	52	400-535	1.6	25 000
C6	682050	HG HD-20/C6	20	59	63	73		17	52	400-535	1.8	25 000
	682060	HG HD-25/C6	25	70	74	80	58	17	56	740-940	2.4	25 000
	682070	HG HD-32/C6	32	76	80	86	64	17	60	1325-1670	2.8	25 000
C8	682080	HG HD-20/C8	20	59	63	79	49	17	52	400-535	2.8	14 000
	682090	HG HD-25/C8	25	70	74	83	53	17	56	740-940	3.3	14 000
	682100	HG HD-32/C8	32	76	80	87		17	60	1325-1670	3.5	14 000

Inch range

Technical Specification *PSK Form*

Coupling size	Part no.	Item description	Dimensions, inch D1	D2	D3	L1	L2	L3	depth	T* ft·lb	Weight kg	G 2.5 at rpm
C5	682040-T	HG HD-3/4”/C5	0.750	2.323	2.480	3.110	2.323	0.669	2.047	295 - 395	1.6	25 000
C6	682050-T	HG HD-3/4”/C6	0.750	2.323	2.480	2.874		0.669	2.047	295 - 395	1.8	25 000
	682060-T	HG HD-1”/C6	1.000	2.756	2.913	3.150	2.283	0.669	2.205	546 - 693	2.4	25 000
	682070-T	HG HD-1 1/4”/C6	1.250	2.992	3.150	3.386	2.520	0.669	2.362	977 - 1232	2.8	25 000
C8	682080-T	HG HD-3/4”/C8	0.750	2.323	2.480	3.110	1.929	0.669	2.047	295 - 395	2.8	14 000
	682090-T	HG HD-1”/C8	1.000	2.756	2.913	3.268	2.087	0.669	2.205	546 - 693	3.3	14 000
	682100-T	HG HD-1 1/4”/C8	1.250	2.992	3.150	3.425		0.669	2.362	977 - 1232	3.5	14 000

**) T = Min. and Max transmittable torque using a h6 cylindrical tool, full depth insert.*
For additional information see section Technical Information.

Information:
- Runout accuracy ≤ 0.004 mm at 2.5 x D1 (max. 50 mm), ≤ 0.00016 inch at 2.5x D1 (max. 1.969 inch)
- Tool shank h6 or h7 can be used
- Center thread, M12x1, for axial length adjustment screw (screw not included) Part no. S042
- Coolant through on all holders
- Bore for data carrier - available on request

Accessories:
Use preset Torque Wrench, 10 Nm, to ensure correct mounting of tools. Part no. 19052.

ETP HYDRO-GRIP can be used with reducing sleeves.
For additional information see section Accessories.

ETP HYDRO-GRIP® PENCIL PSK Form - ISO 26623-1

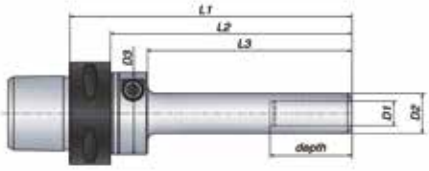

Design 1

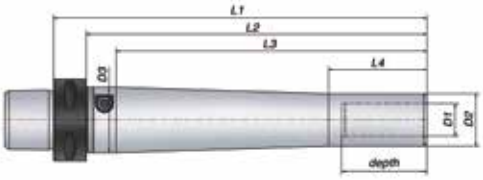

Design 3

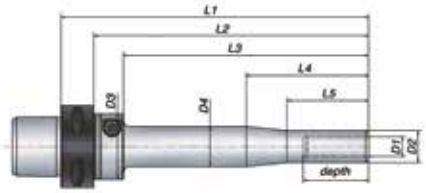

Design 2

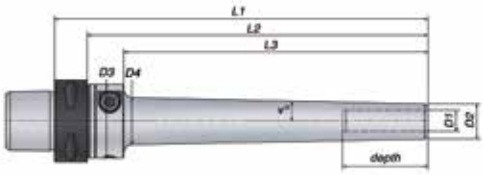

Design 4

Metric range

Technical Specification *PSK Form*

Design	Coupling size	Part no.	Item description	D1	D2	D3	D4	L1	L2	L3	L4	L5	v°	depth	T* Nm	Weight kg	G 2.5 at rpm
				Dimensions, mm													
1	C4	683210	HG PENCIL-6x50/C4	6	12	40		88		50				40	12 - 22	0.5	25 000
1		683180	HG PENCIL-8x50/C4	8	14.5	40		88		50				40	27 - 40	0.5	25 000
1		683200	HG PENCIL-10x50/C4	10	17	40		88		50				40	35 - 70	0.5	25 000
1		683190	HG PENCIL-10x100/C4	10	17	40		138		100				40	35 - 70	0.6	15 000
1		683220	HG PENCIL-12x50/C4	12	19.5	40		88		50				40	60 - 125	0.5	25 000
1		683230	HG PENCIL-12x100/C4	12	19.5	40		138		100				40	60 - 125	0.6	15 000
2		683240	HG PENCIL-12x150/C4	12	19.5	40	24.5	188		150	75	50		40	60 - 125	0.8	10 000
4		683245	HG PENCIL-12x150/C4 D4	12	18	40	33.3	188		150			3	40	60 - 125	0.8	10 000
1	C5	683310	HG PENCIL-6x50/C5	6	12	40		88	68	50				40	12 - 22	0.6	25 000
1		683250	HG PENCIL-8x50/C5	8	14.5	40		88	68	50				40	27 - 40	0.6	25 000
1		683270	HG PENCIL-10x50/C5	10	17	40		88	68	50				40	35 - 70	0.6	25 000
1		683260	HG PENCIL-10x100/C5	10	19.5	40		138	118	100				40	35 - 70	0.7	15 000
1		683320	HG PENCIL-12x50/C5	12	19.5	40		88	68	50				40	60 - 125	0.6	25 000
1		683330	HG PENCIL-12x100/C5	12	19.5	40		138	118	100				40	60 - 125	0.7	15 000
2		683300	HG PENCIL-12x150/C5	12	19.5	40	24.5	188	168	150	75	50		40	60 - 125	0.9	10 000
4		683305	HG PENCIL-12x150/C5 D4	12	18	40	33.3	188	168	150			3	40	60 - 125	0.9	10 000
1		683290	HG PENCIL-16x75/C5	16	26	40		113	93	75				50	165 - 270	0.8	15 000
1		683280	HG PENCIL-16x125/C5	16	26	40		163	143	125				50	165 - 270	1	10 000
3		683340	HG PENCIL-20x110/C5	20	32	40		148	128	110	60			52	260 - 425	1.2	20 000
4		683345	HG PENCIL-20x110/C5 D4	20	28	40	39.5	148	128	110			3	52	260 - 425	1.2	20 000
3		683350	HG PENCIL-20x190/C5	20	32	40		228	208	190	60			52	260 - 425	1.9	10 000
4		683355	HG PENCIL-20x190/C5 D4	20	28	40	37.9	228	208	190			1.5	52	260 - 425	1.9	10 000

**) T = Min. and Max transmittable torque using a h6 cylindrical tool, full depth insert. For additional information see section Technical Information.*

PSK Inch equivalents add "-T" to metric part no. Available on request.

Information:

- Runout accuracy ≤ 0.004 mm at 2.5 x D1 (max. 50 mm),
  ≤ 0.00016 inch at 2.5x D1 (max. 1.969 inch)
  ≤ 0.007 mm at 2.5 x D1 at length L1 > 125 mm
  ≤ 0.00028 inch at 2.5x D1 at length L1 > 4.921 inch
- Tool shank h6 or h7 can be used
- Coolant through on all holders
- Bore for data carrier - available on request

Accessories:

Use preset Torque Wrench, 6 Nm, to ensure correct mounting of tools. Part no. 19050.

ETP HYDRO-GRIP PENCIL can be used with reducing sleeves.
For additional information see section Accessories.

ETP HYDRO-GRIP® PENCIL PSK Form - ISO 26623-1

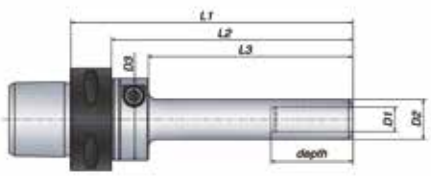

Design 1

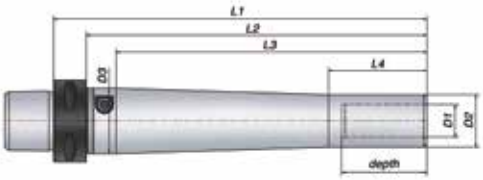

Design 3

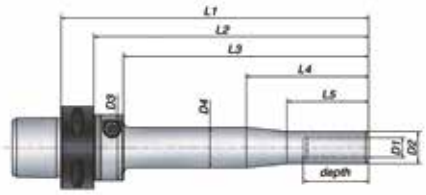

Design 2

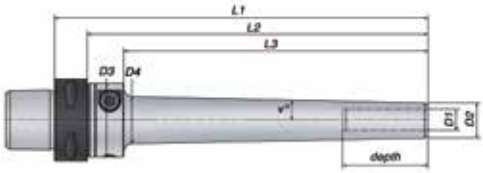

Design 4

Metric range

Technical Specification *PSK Form*

Design	Coupling size	Part no.	Item description	D1	D2	D3	D4	L1	L2	L3	L4	L5	v°	depth	T* Nm	Weight kg	G 2.5 at rpm
				Dimensions, mm													
1	C6	683430	HG PENCIL-6x50/C6	6	12	40		90	68	50				40	12 - 22	1	25 000
1		683360	HG PENCIL-8x50/C6	8	14.5	40		90	68	50				40	27 - 40	1	25 000
1		683380	HG PENCIL-10x50/C6	10	17	40		90	68	50				40	35 - 70	1	25 000
1		683370	HG PENCIL-10x100/C6	10	17	40		140	118	100				40	35 - 70	1.1	15 000
1		683440	HG PENCIL-12x50/C6	12	19.5	40		90	68	50				40	60 - 125	1	25 000
1		683450	HG PENCIL-12x100/C6	12	19.5	40		140	118	100				40	60 - 125	1.1	15 000
4		706189	HG PENCIL-12x100/C6 HD=45	12	18	40		140	118	100			4.5	45	60 - 125	1.1	15 000
2		683410	HG PENCIL-12x150/C6	12	19.5	40	24.5	190	168	150	75	50		40	60 - 125	1.3	10 000
4		683415	HG PENCIL-12x150/C6 D4	12	18	40	33.3	190	168	150			3	40	60 - 125	1.3	10 000
1		683400	HG PENCIL-16x75/C6	16	26	40		115	93	75				50	165 - 270	1.2	15 000
1		683390	HG PENCIL-16x125/C6	16	26	40		165	143	125				50	165 - 270	1.4	10 000
3		683460	HG PENCIL-20x110/C6	20	32	40		150	128	110	60			52	260 - 425	1.6	20 000
4		683465	HG PENCIL-20x110/C6 D4	20	28	40	39.5	150	128	110			3	52	260 - 425	1.6	20 000
3		683420	HG PENCIL-20x190/C6	20	32	40		230	208	190	60			52	260 - 425	2.2	10 000
4		683425	HG PENCIL-20x190/C6 D4	20	28	40	37.9	230	208	190			1.5	52	260 - 425	2.2	10 000
1	C8	683480	HG PENCIL-10x50/C8	10	17	40		102	72	50				40	35 - 70	2.1	14 000
1		683470	HG PENCIL-10x100/C8	10	17	40		152	122	100				40	35 - 70	2.2	14 000
1		683510	HG PENCIL-12x50/C8	12	19.5	40		102	72	50				40	60 - 125	2.1	14 000
1		683520	HG PENCIL-12x100/C8	12	19.5	40		152	122	100				40	60 - 125	2.2	14 000
2		683540	HG PENCIL-12x150/C8	12	19.5	40	24.5	202	172	150	75	50		40	60 - 125	2.4	10 000
4		683545	HG PENCIL-12x150/C8 D4	12	18	40	33.3	202	172	150			3	40	60 - 125	2.4	10 000
1		683500	HG PENCIL-16x75/C8	16	26	40		127	97	75				50	165 - 270	2.3	14 000
1		683490	HG PENCIL-16x125/C8	16	26	40		177	147	125				50	165 - 270	2.5	10 000
3		683530	HG PENCIL-20x110/C8	20	32	40		162	132	110	60			52	260 - 425	2.6	14 000
4		683535	HG PENCIL-20x110/C8 D4	20	28	40	39.5	162	132	110			3	52	260 - 425	2.6	14 000
3		683550	HG PENCIL-20x190/C8	20	32	40		242	212	190	60			52	260 - 425	3.3	10 000
4		683555	HG PENCIL-20x190/C8 D4	20	28	40	37.9	242	212	190			1.5	52	260 - 425	3.3	10 000

**) T = Min. and Max transmittable torque using a h6 cylindrical tool, full depth insert. For additional information see section Technical Information.*
PSK Inch equivalents add "-T" to metric part no. Available on request.

Information:

- Runout accuracy ≤ 0.004 mm at 2.5 x D1 (max. 50 mm),
  ≤ 0.00016 inch at 2.5x D1 (max. 1.969 inch)
  ≤ 0.007 mm at 2.5 x D1 at length L1 > 125 mm
  ≤ 0.00028 inch at 2.5x D1 at length L1 > 4.921 inch
- Tool shank h6 or h7 can be used
- Coolant through on all holders
- Bore for data carrier - available on request

Accessories:

Use preset Torque Wrench, 6 Nm, to ensure correct mounting of tools. Part no. 19050.

ETP HYDRO-GRIP PENCIL can be used with reducing sleeves.
For additional information see section Accessories.

ETP HYDRO-GRIP® PENCIL
Cylindrical extension

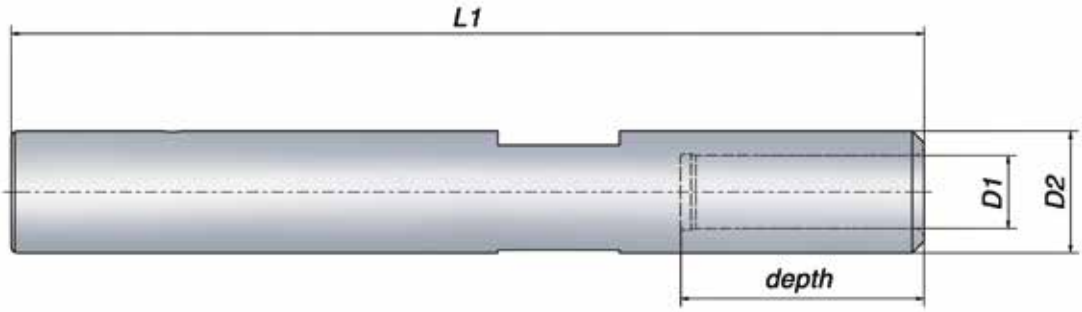

Metric range

Technical Specification

Part no.	Item description	D1	D2	L1	depth	T* Nm	Weight kg	G 2.5 at rpm
		Dimensions, mm						
336891	HG PENCIL-12/Rd20-150	12	20	150	40	60 - 125	0.3	15 000
704540	HG PENCIL-12/Rd20-215	12	20	215	40	60 - 125	0.3	15 000

**) T = Min. and Max transmittable torque using a h6 cylindrical tool, full depth insert. For additional information see section Technical Information.*

Information:
- Runout accuracy ≤ 0.004 mm at 2.5 x D1 (max. 50 mm), ≤ 0.00016 inch at 2.5x D1 (max. 1.969 inch)
- Tool shank h6 or h7 can be used
- Coolant through

Accessories:
Use preset Torque Wrench, 6 Nm, to ensure correct mounting of tools. Part no. 19050.

ETP HYDRO-GRIP PENCIL can be used with reducing sleeves.
For additional information see section Accessories.

ETP ECOGRIP™ ER

For outer threaded toolholders and driven tools

Adjustable holder

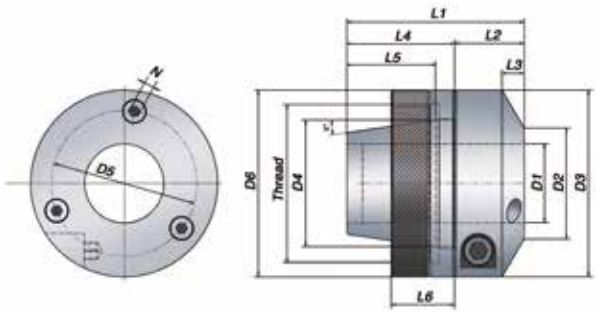

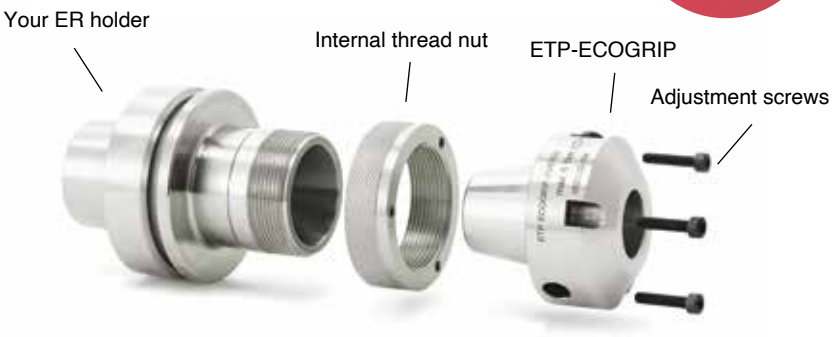

Metric range

Technical Specification

ER size	Part no.	Item description	Dimensions, mm D1	D2	D3	D4	L1	L2	L3	L4	L5	Adjustment screws D5	No.	Dim.	N	Internal thread nut D6	L6	Thread	T* Nm
16	686845	ECOGRIP-6/ER16	6	16	34	16	30	14	5	16	14	28	2	M3x16*	2.5	34	10	M22x1.5	6-14
	686846	ECOGRIP-6/ERM16	6	16	34	16	30	14	5	16	14	28	2	M3x16*	2.5	34	10	M19x1	6-14
	704952	ECOGRIP-8/ER16	8	18	36	16	30	14	5	16	14	28	2	M3x16*	2.5	36	10	M22x1.5	14 - 35
	705718	ECOGRIP-8/ERM16	8	18	36	16	30	14	5	16	14	28	2	M3x16*	2.5	34	10	M19x1	14 - 35
20	686855	ECOGRIP-12/ER20	12	22	43.5	20	40	24	7	16	14	34	3	M4x20	3	43.5	12	M25x1.5	50-90
	686856	ECOGRIP-12/ERM20	12	22	43.5	20	40	24	7	16	14	34	3	M4x20	3	43.5	12	M24x1	50-90
25	686905	ECOGRIP-12/ER25	12	26	48	25	46	26	7	20	18	41	3	M4x20	3	48	13	M32x1.5	50-90
	686906	ECOGRIP-12/ERM25	12	26	48	25	46	26	7	20	18	41	3	M4x20	3	48	13	M30x1	50-90
	686875	ECOGRIP-16/ER25	16	26	48	25	46	26	7	20	18	41	3	M4x20	3	48	13	M32x1.5	120-200
	686876	ECOGRIP-16/ERM25	16	26	48	25	46	26	7	20	18	41	3	M4x20	3	48	13	M30x1	120-200
32	686865	ECOGRIP-20/ER32	20	30	52	32	52	25.5	7	26.5	24.5	45	3	M4x20	3	52	15	M40x1.5	230-370
40	686885	ECOGRIP-25/ER40	25	35	59	40	56	22	7	34	28	46	3	M4x16	3	59	20	M50x1.5	420-600
50	686895	ECOGRIP-32/ER50**	32	42	69.5	50	60	22	7	38	32	56	3	M4x15	3	78	20	M64x2	660-1000

Inch range

Technical Specification

ER size	Part no.	Item description	Dimensions, inch D1	D2	D3	D4	L1	L2	L3	L4	L5	Adjustment screws D5	No.	Dim.	N	Internal thread nut D6	L6	Thread	T* ft·lb
16	686945	ECOGRIP-1/4"/ER16	0.250	0.630	1.339	0.630	1.181	0.551	0.197	0.630	0.551	1.102	2	M3x16*	0.098	1.339	0.394	M22x1.5	4.4-10
20	686955	ECOGRIP-1/2"/ER20	0.500	0.866	1.713	0.787	1.575	0.945	0.276	0.630	0.551	1.339	3	M4x20	0.118	1.713	0.472	M25x1.5	37-66
	686956	ECOGRIP-1/2"/ERM20	0.500	0.866	1.713	0.787	1.575	0.945	0.276	0.630	0.551	1.339	3	M4x20	0.118	1.713	0.472	M24x1	37-66
25	687005	ECOGRIP-1/2"/ER25	0.500	1.024	1.890	0.984	1.811	1.024	0.276	0.787	0.709	1.614	3	M4x20	0.118	1.890	0.512	M32x1.5	37-66
	686975	ECOGRIP-5/8"ER25	0.625	1.024	1.890	0.984	1.811	1.024	0.276	0.787	0.709	1.614	3	M4x20	0.118	1.890	0.512	M32x1.5	89-148
32	686965	ECOGRIP-3/4"/ER32	0.750	1.181	2.047	1.260	2.047	1.004	0.276	1.043	0.965	1.772	3	M4x20	0.118	2.047	0.591	M40x1.5	170-273
40	686985	ECOGRIP-1"/ER40	1.000	1.378	2.323	1.575	2.205	0.866	0.276	1.339	1.102	1.811	3	M4x16	0.118	2.323	0.787	M50x1.5	310-443
50	686995	ECOGRIP-1 1/4"/ER50**	1.250	1.654	2.736	1.969	2.362	0.866	0.276	1.496	1.260	2.205	3	M4x15	0.118	3.071	0.787	M64x2	487-738

**) This size ECOGRIP ER has 2x M3x16 adjustment screws located 180 degrees apart.*
It also has an additional 2x M5x8 adjustment screws, located 180 degrees apart, at the back of the thread nut.

***) The thread nut width L6 of this size ECOGRIP ER is 20 mm. The thread depth is however only 15 mm.*

**) T = Min. and Max transmittable torque using a h6 cylindrical tool, full depth insert. For additional information see section Technical Information.*

Information:

- Runout accuracy - adjustable!
  When mounted correctly, an initial runout of approx. 0.020 mm is achieved. Adjust runout further by lightly tightening on the adjustment screws until your desired runout is achieved.
- Tool shank h6 or h7 can be used
- Balanced by design. For use above 5 - 10 000 rpm – we recommend individual balancing.

Accessories:

Use preset Torque Wrench, 6 Nm, to ensure correct mounting of tools. Part no. 19050.
For ER16 Use Torque wrench Part no. 19055.

ETP ECOGRIP ER can be used with reducing sleeves.
For additional information see section Accessories.

HYDRO-GRIP

ETP ECOGRIP™ ER

For inner threaded driven tools

Adjustable holder

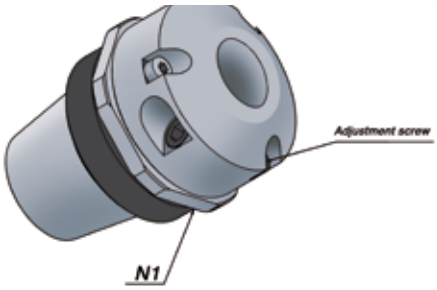

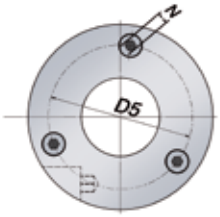

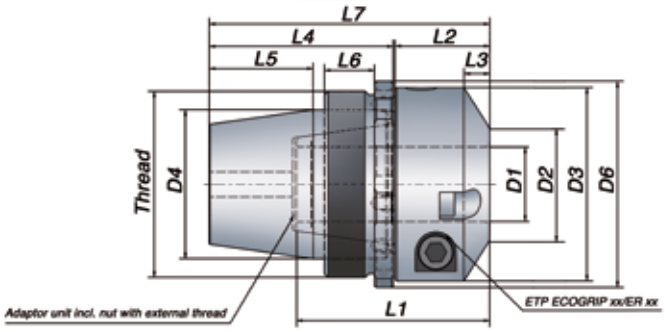

Metric range

Technical Specification

ER size	Part no.	Item description	Dimensions, mm D1	D2	D3	D4	L1	L2	L3	L4	L5	L7	Adjustment screws D5	No.	Dim.	N	External thread nut D6	L6	Thread	N1	M_{anz} Nm	T* Nm
25	687310	ECOGRIP-12/ER20-25	12	22	43.5	25	40	24	7	36	18	60.5	34	3	M4x16	3	43.5	10	M32x1.5	40	50	50-90
32	687320	ECOGRIP-12/ER25-32	12	26	48	32	46	26	7	44.5	24.5	71	41	3	M4x16	3	48	12	M40x1.5	44	104	50-90
	687330	ECOGRIP-16/ER25-32	16	26	48	32	46	26	7	44.5	24.5	71	41	3	M4x16	3	48	12	M40x1.5	44	104	120-200
40	687340	ECOGRIP-20/ER32-40	20	30	52	40	52	25.5	7	49.5	28	75.5	45	3	M4x16	3	56	13.5	M50x1.5	52	128	230-370

Inch range

Technical Specification

ER size	Part no.	Item description	Dimensions, inch D1	D2	D3	D4	L1	L2	L3	L4	L5	L7	Adjustment screws D5	No.	Dim.	N	External thread nut D6	L6	Thread	N1	M_{anz} Nm	T* ft·lb
25	687410	ECOGRIP-1/2"/ER20-25	0.500	0.866	1.713	0.984	1.575	0.945	0.276	1.417	0.709	2.382	1.339	3	M4x16	0.118	1.713	0.394	M32x1.5	1.575	50	37-66
32	687420	ECOGRIP-1/2"/ER25-32	0.500	1.024	1.890	1.260	1.811	1.024	0.276	1.752	0.965	2.795	1.614	3	M4x16	0.118	1.890	0.472	M40x1.5	1.732	104	37-66
	687430	ECOGRIP-5/8"/ER25-32	0.625	1.024	1.890	1.260	1.811	1.024	0.276	1.752	0.965	2.795	1.614	3	M4x16	0.118	1.890	0.472	M40x1.5	1.732	104	89-148
40	687440	ECOGRIP-3/4"/ER32-40	0.750	1.181	2.047	1.575	2.047	1.004	0.276	1.949	1.102	2.972	1.772	3	M4x16	0.118	2.205	0.531	M50x1.5	2.047	128	170-273

Tt: Recommended tightening torque in Nm for the External thread nut.

**) T = Min. and Max transmittable torque using a h6 cylindrical tool, full depth insert. For additional information see section Technical Information.*

Information:

- Runout accuracy - adjustable!
  When mounted correctly, an initial runout of approx. 0.020 mm is achieved. Adjust runout furher by lightly tightening on the adjustment screws until your desired runout is achieved.
- Tool shank h6 or h7 can be used
- Balanced by design

Accessories:

Use preset Torque Wrench, 6 Nm, to ensure correct mounting of tools. Part no. 19050.

ETP ECOGRIP ER can be used with reducing sleeves.
For additional information see section Accessories.

Reduction Sleeves for ETP Toolholders

Reduction sleeve HS - for internal cooling

The reduction sleeves are designed to fit with the ETP Toolholders. They are specially suited for high precision clamping of cylindrical tool shanks per DIN 6335 form HA, HB and HE, as well as tool shanks per DIN 1835 form B, C, D and E.

The special design of the reduction sleeves allows an efficient use of coolant through cutting tools.

Reduction sleeve HS-CF - for peripheral cooling

Outer-Ø of reduction sleeve corresponds to the type.
HS12 = Ø 12 mm
HS20 = Ø 20 mm
HS25 = Ø 25 mm
HS32 = Ø 32 mm

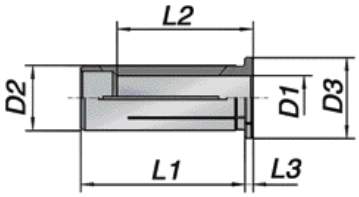

BENEFITS & FEATURES

- **Standard version HS suited for internal cooling**
  Metal-to-metal seal for cutting tools with internal coolant channels.
- **HS-CF version suited for peripheral cooling**
  The coolant flush reduction sleeves HS-CF can be used for peripheral cooling due to their coolant channels.
- **Accurate precision**
  High runout accuracy < 3 µm.
- **High flexibility**
  Clamping of different tool shank diameters. 12, 20, 25, 32 mm and 1/2”, 3/4”, 1”, 1 1/4”.
- **Power increase**
  When using reduction sleeves the transmittable torque is increased.

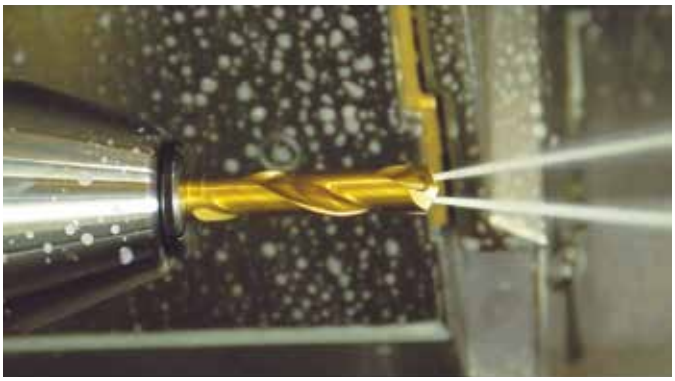

Using Reduction sleeve HS - for internal cooling.

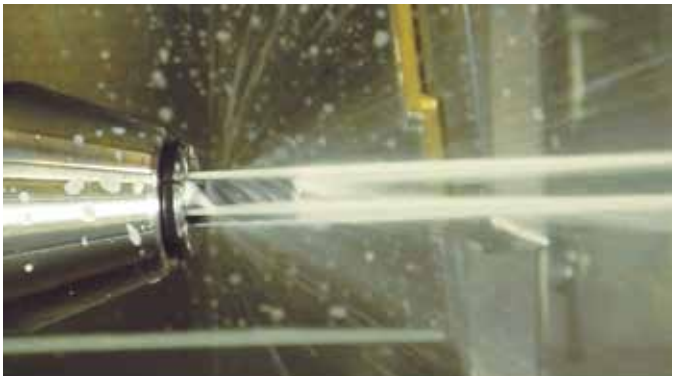

Using Reduction sleeve HS-CF - for peripheral cooling.

HYDRO-GRIP

Reduction Sleeves mm to mm

Reduction Sleeves mm to mm

Part no.	Item description	D2 mm	D1 mm	D3 mm	L1 mm	L2 mm	L3 mm	Min. tool insert depth*
Reduction Sleeves HS 6								
R1906.01000	HS 6 / 1 mm	6	1	9	27	20	3	15.5
R1906.02000	HS 6 / 2 mm	6	2	9	27	24	3	21
R1906.03000	HS 6 / 3 mm	6	3	9	27	30	3	26
R1906.04000	HS 6 / 4 mm	6	4	9	27	30	3	26
Reduction Sleeves HS 8								
R1908.06000	HS 8 / 6 mm	8	6	11	27	30	3	26
Reduction Sleeves HS 12-MB (Micro Bore) *MB can not seal for coolant through tools.*								
R1912.01009	HS 12-MB / 1 mm	12	1.000	16	40	20	4	44
R1912.01509	HS 12-MB / 1,5 mm	12	1.500	16	40	20	4	44
R1912.02009	HS 12-MB / 2 mm	12	2.000	16	40	20	4	44
R1912.02509	HS 12-MB / 2,5 mm	12	2.500	16	40	20	4	44
Reduction Sleeves HS 12								
R1912.03000	HS 12 / 3 mm	12	3.000	16	40	29	4	25
R1912.04000	HS 12 / 4 mm	12	4.000	16	40	29	4	27
R1912.05000	HS 12 / 5 mm	12	5.000	16	40	30	4	28
R1912.06000	HS 12 / 6 mm	12	6.000	16	40	36	4	34
R1912.07000	HS 12 / 7 mm	12	7.000	16	40	37	4	34
R1912.08000	HS 12 / 8 mm	12	8.000	16	40	37	4	34
R1912.09000	HS 12 / 9 mm	12	9.000	16	40	37	4	34
R1912.10000	HS 12 / 10 mm	12	10.000	16	40	40	4	37
Reduction Sleeves HS 12-CF								
R1912.03002	HS 12-CF / 3 mm	12	3.000	16	40	29	4	25
R1912.04002	HS 12-CF / 4 mm	12	4.000	16	40	29	4	27
R1912.05002	HS 12-CF / 5 mm	12	5.000	16	40	30	4	28
R1912.06002	HS 12-CF / 6 mm	12	6.000	16	40	36	4	34
R1912.08002	HS 12-CF / 8 mm	12	8.000	16	40	37	4	34
Reduction Sleeves HS 20								
R1920.03000	HS 20 / 3 mm	20	3.000	25	50	28	4	25
R1920.04000	HS 20 / 4 mm	20	4.000	25	50	28	4	25
R1920.05000	HS 20 / 5 mm	20	5.000	25	50	28	4	25
R1920.06000	HS 20 / 6 mm	20	6.000	25	50	36	4	34
R1920.07000	HS 20 / 7 mm	20	7.000	25	50	38	4	34
R1920.08000	HS 20 / 8 mm	20	8.000	25	50	37	4	35
R1920.09000	HS 20 / 9 mm	20	9.000	25	50	38	4	35
R1920.10000	HS 20 / 10 mm	20	10.000	25	50	40	4	37
R1920.11000	HS 20 / 11 mm	20	11.000	25	50	40	4	37
R1920.12000	HS 20 / 12 mm	20	12.000	25	50	45	4	42
R1920.13000	HS 20 / 13 mm	20	13.000	25	50	45	4	42
R1920.14000	HS 20 / 14 mm	20	14.000	25	50	45	4	42
R1920.15000	HS 20 / 15 mm	20	15.000	25	50	45	4	42
R1920.16000	HS 20 / 16 mm	20	16.000	25	50	48	4	44
R1920.18000	HS 20 / 18 mm	20	18.000	25	50	48	4	46

***) Minimum tool insertion depth (in mm) to ensure correct sealing effect for HS sleeves or correct periphery cooling for HS-CF sleeves.**

Reduction Sleeves mm to mm

Part no.	Item description	D2 mm	D1 mm	D3 mm	L1 mm	L2 mm	L3 mm	Min. tool insert depth*
Reduction Sleeves HS 20-CF								
R1920.03002	HS 20-CF / 3 mm	20	3.000	25	50	28	4	25
R1920.04002	HS 20-CF / 4 mm	20	4.000	25	50	28	4	25
R1920.05002	HS 20-CF / 5 mm	20	5.000	25	50	28	4	25
R1920.06002	HS 20-CF / 6 mm	20	6.000	25	50	36	4	34
R1920.08002	HS 20-CF / 8 mm	20	8.000	25	50	37	4	35
R1920.10002	HS 20-CF / 10 mm	20	10.000	25	50	40	4	37
R1920.12002	HS 20-CF / 12 mm	20	12.000	25	50	45	4	42
R1920.14002	HS 20-CF / 14 mm	20	14.000	25	50	45	4	42
R1920.16002	HS 20-CF / 16 mm	20	16.000	25	50	48	4	44
Reduction Sleeves HS 25								
R1925.03000	HS 25 / 3 mm	25	3.000	30	56	29	4	24
R1925.04000	HS 25 / 4 mm	25	4.000	30	56	29	4	25
R1925.05000	HS 25 / 5 mm	25	5.000	30	56	29	4	27
R1925.06000	HS 25 / 6 mm	25	6.000	30	56	37	4	34
R1925.07000	HS 25 / 7 mm	25	7.000	30	56	37	4	34
R1925.08000	HS 25 / 8 mm	25	8.000	30	56	37	4	34
R1925.09000	HS 25 / 9 mm	25	9.000	30	56	38	4	35
R1925.10000	HS 25 / 10 mm	25	10.000	30	56	40	4	37
R1925.12000	HS 25 / 12 mm	25	12.000	30	56	46	4	41
R1925.14000	HS 25 / 14 mm	25	14.000	30	56	47	4	42
R1925.16000	HS 25 / 16 mm	25	16.000	30	56	48	4	43
R1925.18000	HS 25 / 18 mm	25	18.000	30	56	48	4	44
R1925.20000	HS 25 / 20 mm	25	20.000	30	56	50	4	44
Reduction Sleeves HS 32								
R1932.03000	HS 32 / 3 mm	32	3.000	36	60	29	4	25
R1932.04000	HS 32 / 4 mm	32	4.000	36	60	29	4	26
R1932.05000	HS 32 / 5 mm	32	5.000	36	60	29	4	26
R1932.06000	HS 32 / 6 mm	32	6.000	36	60	36	4	34
R1932.07000	HS 32 / 7 mm	32	7.000	36	60	37	4	34
R1932.08000	HS 32 / 8 mm	32	8.000	36	60	36	4	35
R1932.09000	HS 32 / 9 mm	32	9.000	36	60	37	4	35
R1932.10000	HS 32 / 10 mm	32	10.000	36	60	40	4	36
R1932.11000	HS 32 / 11 mm	32	11.000	36	60	40	4	36
R1932.12000	HS 32 / 12 mm	32	12.000	36	60	45	4	41
R1932.13000	HS 32 / 13 mm	32	13.000	36	60	45	4	41
R1932.14000	HS 32 / 14 mm	32	14.000	36	60	46	4	43
R1932.15000	HS 32 / 15 mm	32	15.000	36	60	46	4	43
R1932.16000	HS 32 / 16 mm	32	16.000	36	60	48	4	44
R1932.17000	HS 32 / 17 mm	32	17.000	36	60	48	4	44
R1932.18000	HS 32 / 18 mm	32	18.000	36	60	49	4	44
R1932.19000	HS 32 / 19 mm	32	19.000	36	60	49	4	44
R1932.20000	HS 32 / 20 mm	32	20.000	36	60	50	4	45
R1932.22000	HS 32 / 22 mm	32	22.000	36	60	50	4	45
R1932.25000	HS 32 / 25 mm	32	25.000	36	60	56	4	52
Reduction Sleeves HS 32-CF								
R1932.06002	HS 32-CF / 6 mm	32	6.000	36	60	36	4	34
R1932.08002	HS 32-CF / 8 mm	32	8.000	36	60	36	4	35
R1932.10002	HS 32-CF / 10 mm	32	10.000	36	60	40	4	36
R1932.12002	HS 32-CF / 12 mm	32	12.000	36	60	45	4	41
R1932.14002	HS 32-CF / 14 mm	32	14.000	36	60	46	4	43
R1932.16002	HS 32-CF / 16 mm	32	16.000	36	60	48	4	44
R1932.18002	HS 32-CF / 18 mm	32	18.000	36	60	49	4	44
R1932.20002	HS 32-CF / 20 mm	32	20.000	36	60	50	4	45
R1932.25002	HS 32-CF / 25 mm	32	25.000	36	60	56	4	52

Reduction Sleeves Inch to inch

Reduction Sleeves inch to inch

Part no.	Item description	D2 inch	D1 inch	D3 inch	L1 inch	L2 inch	L3 inch	Min. tool insert depth*
Reduction Sleeves HS 1/2”								
R1913.03182	HS 1/2” / 1/8”	0.500	0.1250	0.630	1.575	1.142	0.157	26
R1913.04762	HS 1/2” / 3/16”	0.500	0.1875	0.630	1.575	1.142	0.157	28
R1913.06352	HS 1/2” / 1/4”	0.500	0.2500	0.630	1.575	1.417	0.157	34
R1913.07942	HS 1/2”/ 5/16”	0.500	0.3125	0.630	1.575	1.457	0.157	34
R1913.09522	HS 1/2”/ 3/8”	0.500	0.3750	0.630	1.575	1.575	0.157	37
Reduction Sleeves HS 1/2”-CF								
R1913.03183	HS 1/2”-CF / 1/8”	0.500	0.1250	0.630	1.575	1.142	0.157	26
R1913.06353	HS 1/2”-CF / 1/4”	0.500	0.2500	0.630	1.575	1.417	0.157	26
R1913.09523	HS 1/2”-CF / 3/8”	0.500	0.3750	0.630	1.575	1.575	0.157	37
Reduction Sleeves HS 3/4”								
R1919.03182	HS 3/4” / 1/8”	0.750	0.1250	0.984	1.969	1.102	0.157	25
R1919.04762	HS 3/4”/ 3/16”	0.750	0.1875	0.984	1.969	1.102	0.157	25
R1919.06352	HS 3/4”/ 1/4”	0.750	0.2500	0.984	1.969	1.417	0.157	34
R1919.07942	HS 3/4”/ 5/16”	0.750	0.3125	0.984	1.969	1.457	0.157	35
R1919.09522	HS 3/4”/ 3/8”	0.750	0.3750	0.984	1.969	1.417	0.157	35
R1919.11112	HS 3/4” / 7/16”	0.750	0.4375	0.984	1.969	1.575	0.157	37
R1919.12702	HS 3/4”/ 1/2”	0.750	0.5000	0.984	1.969	1.772	0.157	42
R1919.14292	HS 3/4”/ 9/16”	0.750	0.5625	0.984	1.969	1.772	0.157	42
R1919.15882	HS 3/4”/ 5/8”	0.750	0.6250	0.984	1.969	1.890	0.157	44
Reduction Sleeves HS 3/4”-CF								
R1919.06353	HS 3/4”-CF / 1/4”	0.750	0.2500	0.984	1.969	1.417	0.157	34
R1919.09523	HS 3/4”-CF / 3/8”	0.750	0.3750	0.984	1.969	1.417	0.157	35
R1919.12703	HS 3/4”-CF / 1/2”	0.750	0.5000	0.984	1.969	1.772	0.157	42
R1919.15883	HS 3/4”-CF / 5/8”	0.750	0.6250	0.984	1.969	1.890	0.157	44
Reduction Sleeves HS 1”								
R1926.03182	HS 1” / 1/8”	1.000	0.1250	1.181	2.205	1.142	0.157	26
R1926.04762	HS 1” / 3/16”	1.000	0.1875	1.181	2.205	1.142	0.157	27
R1926.06352	HS 1” / 1/4”	1.000	0.2500	1.181	2.205	1.457	0.157	34
R1926.07942	HS 1” / 5/16”	1.000	0.3125	1.181	2.205	1.457	0.157	34
R1926.09522	HS 1” / 3/8”	1.000	0.3750	1.181	2.205	1.496	0.157	35
R1926.11112	HS 1” / 7/16”	1.000	0.4375	1.181	2.205	1.575	0.157	37
R1926.12702	HS 1” / 1/2”	1.000	0.5000	1.181	2.205	1.811	0.157	41
R1926.14292	HS 1” / 9/16”	1.000	0.5625	1.181	2.205	1.850	0.157	42
R1926.15882	HS 1” / 5/8”	1.000	0.6250	1.181	2.205	1.890	0.157	43
R1926.17462	HS 1” / 11/16”	1.000	0.6875	1.181	2.205	1.890	0.157	44
R1926.19052	HS 1” / 3/4”	1.000	0.7500	1.181	2.205	1.890	0.157	44
Reduction Sleeves HS 1”-CF								
R1926.06353	HS 1”-CF / 1/4”	1.000	0.2500	1.181	2.205	1.457	0.157	34
R1926.09523	HS 1”-CF / 3/8”	1.000	0.3750	1.181	2.205	1.496	0.157	35
R1926.12703	HS 1”-CF / 1/2”	1.000	0.5000	1.181	2.205	1.811	0.157	41
R1926.15883	HS 1”-CF / 5/8”	1.000	0.6250	1.181	2.205	1.890	0.157	43
R1926.19053	HS 1”-CF / 3/4”	1.000	0.7500	1.181	2.205	1.890	0.157	44
Reduction Sleeves HS 1 1/4”								
R1931.04762	HS 1 1/4” / 3/16”	1.250	0.1875	1.417	2.362	1.142	0.157	26
R1931.06352	HS 1 1/4” / 1/4”	1.250	0.2500	1.417	2.362	1.417	0.157	34
R1931.07942	HS 1 1/4” / 5/16”	1.250	0.3125	1.417	2.362	1.417	0.157	35
R1931.09522	HS 1 1/4” / 3/8”	1.250	0.3750	1.417	2.362	1.457	0.157	35
R1931.11112	HS 1 1/4” / 7/16”	1.250	0.4375	1.417	2.362	1.772	0.157	36
R1931.12702	HS 1 1/4” / 1/2”	1.250	0.5000	1.417	2.362	1.772	0.157	42
R1931.15882	HS 1 1/4” / 5/8”	1.250	0.6250	1.417	2.362	1.811	0.157	44
R1931.17462	HS 1 1/4” / 11/16”	1.250	0.6875	1.417	2.362	1.890	0.157	44
R1931.19052	HS 1 1/4”/ 3/4”	1.250	0.7500	1.417	2.362	1.969	0.157	44
R1931.25402	HS 1 1/4” / 1”	1.250	1.000	1.417	2.362	2.205	0.157	52
Reduction Sleeves HS 1 1/4”-CF								
R1931.12703	HS 1 1/4”-CF / 1/2”	1.250	0.5000	1.417	2.362	1.772	0.157	42
R1931.15883	HS 1 1/4”-CF / 5/8”	1.250	0.6250	1.417	2.362	1.811	0.157	44
R1931.19053	HS 1 1/4”-CF / 3/4”	1.250	0.7500	1.417	2.362	1.969	0.157	44
R1931.25403	HS 1 1/4”-CF / 1”	1.250	1.000	1.417	2.362	2.205	0.157	52

mm to inch

Reduction Sleeves mm to inch

Part no.	Item description	D2 mm	D1 inch	D3 mm	L1 mm	L2 mm	L3 mm	Min. tool insert depth*
Reduction Sleeves HS 12								
R1912.03181	HS 12 / 1/8”	12	0.1250	16	40	29	4	25
R1912.04761	HS 12 / 3/16”	12	0.1875	16	40	30	4	28
R1912.06351	HS 12 / 1/4”	12	0.2500	16	40	36	4	34
R1912.07941	HS 12 / 5/16”	12	0.3125	16	40	36	4	34
R1912.09521	HS 12 / 3/8”	12	0.3750	16	40	37	4	37
Reduction Sleeves HS 12-CF								
R1912.03183	HS 12-CF / 1/8”	12	0.1250	16	40	29	4	25
R1912.06353	HS 12-CF / 1/4”	12	0.2500	16	40	36	4	34
Reduction Sleeves HS 20								
R1920.03181	HS 20 / 1/8”	20	0.1250	25	50	28	4	22
R1920.04761	HS 20 / 3/16”	20	0.1875	25	50	28	4	25
R1920.06351	HS 20 / 1/4”	20	0.2500	25	50	36	4	34
R1920.07941	HS 20 / 5/16”	20	0.3125	25	50	37	4	35
R1920.09521	HS 20 / 3/8”	20	0.3750	25	50	36	4	35
R1920.11111	HS 20 / 7/16”	20	0.4375	25	50	40	4	37
R1920.12701	HS 20 / 1/2”	20	0.5000	25	50	45	4	42
R1920.14291	HS 20 / 9/16”	20	0.5625	25	50	45	4	42
R1920.15881	HS 20 / 5/8”	20	0.6250	25	50	48	4	44
Reduction Sleeves HS 25								
R1925.03181	HS 25 / 1/8”	25	0.1250	30	56	29	4	24
R1925.06351	HS 25 / 1/4”	25	0.2500	30	56	37	4	34
R1925.07941	HS 25 / 5/16”	25	0.3125	30	56	37	4	34
R1925.09521	HS 25 / 3/8”	25	0.3750	30	56	38	4	35
R1925.11111	HS 25 / 7/16”	25	0.4375	30	56	40	4	37
R1925.12701	HS 25 / 1/2”	25	0.5000	30	56	46	4	41
R1925.15881	HS 25 / 5/8”	25	0.6250	30	56	48	4	43
R1925.17461	HS 25 / 11/16”	25	0.6875	30	56	48	4	43
R1925.19051	HS 25 / 3/4”	25	0.7500	30	56	48	4	44
Reduction Sleeves HS 32								
R1932.04761	HS 32 / 3/16”	32	0.1875	36	60	29	4	26
R1932.06351	HS 32 / 1/4”	32	0.2500	36	60	36	4	34
R1932.07941	HS 32 / 5/16”	32	0.3125	36	60	36	4	35
R1932.09521	HS 32 / 3/8”	32	0.3750	36	60	37	4	35
R1932.11111	HS 32 / 7/16”	32	0.4375	36	60	45	4	36
R1932.12701	HS 32 / 1/2”	32	0.5000	36	60	45	4	42
R1932.14291	HS 32 / 9/16”	32	0.5625	36	60	46	4	43
R1932.15881	HS 32 / 5/8”	32	0.6250	36	60	46	4	44
R1932.17461	HS 32 / 11/16”	32	0.6875	36	60	48	4	44
R1932.19051	HS 32 / 3/4”	32	0.7500	36	60	50	4	44
R1932.22221	HS 32 / 7/8”	32	0.8750	36	60	50	4	45
R1932.25401	HS 32 / 1”	32	1.000	36	60	56	4	52

***) Minimum tool insertion depth (in mm) to ensure correct sealing effect for HS sleeves or correct periphery cooling for HS-CF sleeves.**

Accessories
Torque wrench and Extractor

Comparison of Transmittable Torque at Ø 20 mm

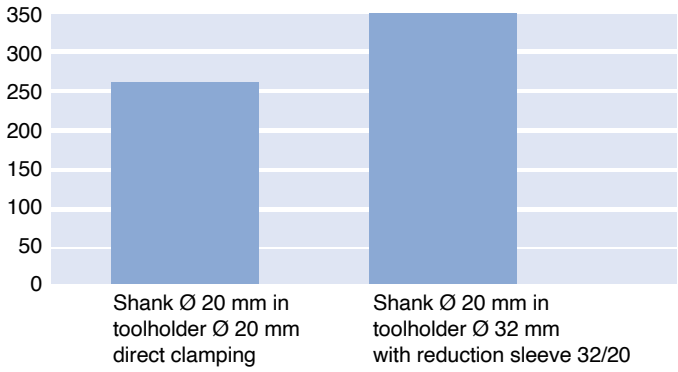

Torque wrench

Use torque wrench to ensure correct tightening independent on user. Should be used with all HYDRO-FIX® holders.

Item description	Tightening torque:		Part no.
	Nm	ft · lb	
Torque wrench (4 mm Hex)	6	4.4	19055
Torque wrench (5 mm Hex)	6	4.4	19050
Torque wrench (8 mm Hex)	10	7.4	19054

Extractor

Item description	Part no.	For Sizes	A [mm]	B [mm]
EHS 12 - 1/2“	E7321.12000	HS 12	24.6	100
EHS 20 - 3/4“	E7321.20000	HS 20	38.0	160
EHS 25 - 1“	E7321.25000	HS 25	51.0	180
EHS 32 - 1 1/4“	E7321.32000	HS 32	63.0	200

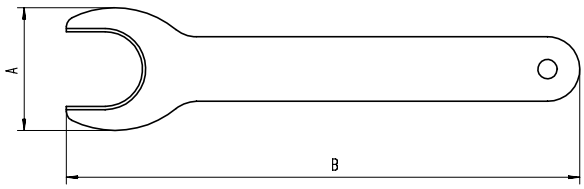

The extractor helps to remove the reduction sleeve from the clamping unit.

- Improper assembly can damage the concentricity of the reduction sleeve.
- Insert tools the full length of the reduction sleeve.
- Tool shank h6 or h7 can be used.
- Do not clamp reduction sleeve without a tool. Reduction Sleeve will be damaged.

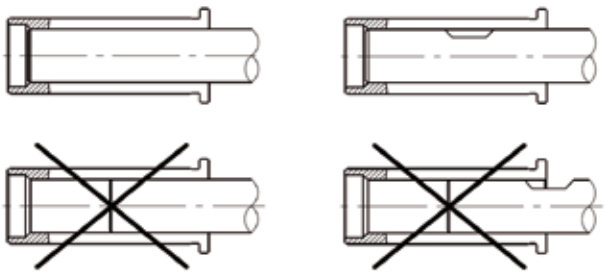

Transmittable torque

The tables gives the minimum transmittable torque depending on the tool diameter and tolerance.

For optimal performance and precision we recommend the use of h6-tools. Also tools with h7 tolerance can be used, however the transmittable torque will decrease, see tables:

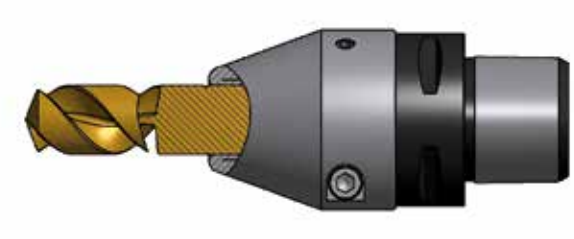

- at direct tool clamping

- at clamping with reducing sleeve

Torque transmission capacity at different tool tolerances for:		HYDRO-GRIP / ECOGRIP							
Tool diameter in mm		***6***	***8***	***10***	***12***	***16***	***20***	***25***	***32***
Tol. h6 min.	Nm	12	27	35	60	165	260	480	820
Tol. h7 min.	Nm	7	18	14	30	105	175	350	630
Tol. Max (0)	Nm	22	40	70	125	270	425	710	1250
Tool diameter in inches		***1/4”***	***5/16”***	***3/8”***	***1/2”***	***5/8”***	***3/4”***	***1”***	***1 1/4”***
Tol. h6 min.	ft·lb	13	20	22	55	122	192	354	605
Tol. h7 min.	ft·lb	9	13	7	32	77	129	258	465
Tol. Max (0)	ft·lb	20	30	52	105	199	314	524	922

Torque transmission capacity at different tool tolerances for:		HYDRO-GRIP HD				
Tool diameter in mm		***12***	***16***	***20***	***25***	***32***
Tol. h6 min.	Nm	85	250	400	740	1325
Tol. h7 min.	Nm	50	190	330	630	1140
Tol. Max (0)	Nm	150	340	535	940	1670
Tool diameter in inches		***1/2”***	***5/8”***	***3/4”***	***1”***	***1 1/4”***
Tol. h6 min.	ft·lb	90	180	295	546	977
Tol. h7 min.	ft·lb	60	140	243	465	841
Tol. Max (0)	ft·lb	140	250	395	693	1232

Torque transmission capacity using reducing sleeves for:	HYDRO-GRIP / ECOGRIP			
	Tool with reducing sleeve in mm			
	12	***20***	***25***	***32***
Holder mm	Nm	Nm	Nm	Nm
12	60	-	-	-
20	95	260	-	-
25	140	235	480	-
32	190	350	520	820
	Tool with reducing sleeve in inches			
	1/2”	***3/4”***	***1”***	***1 1/4”***
Holder inch	ft·lb	ft·lb	ft·lb	ft·lb
1/2”	55	-	-	-
3/4”	70	192	-	-
1”	103	173	354	-
1 1/4”	140	258	384	605

Torque transmission capacity using reducing sleeves for:	HYDRO-GRIP HD			
	Tool with reducing sleeve in mm			
	12	***20***	***25***	***32***
Holder mm	Nm	Nm	Nm	Nm
12	-	-	-	-
20	170	400	-	-
25	260	470	740	-
32	340	640	950	1325
	Tool with reducing sleeve in inches			
	1/2”	***3/4”***	***1”***	***1 1/4”***
Holder inch	ft·lb	ft·lb	ft·lb	ft·lb
1/2”	-	-	-	-
3/4”	125	295	-	-
1”	192	347	546	-
1 1/4”	251	472	701	977

Transmittable torque

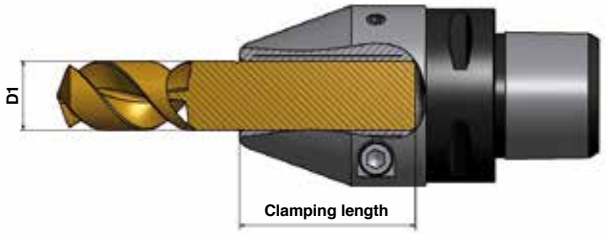

- at reduced clamping length

"By reducing the tool clamping length, an increase accessibility can be reached when machining. Below table indicates the reduction in torque capacity in such a case. For short time use only!"

HYDRO-GRIP torque transmission capacity at different clamping lengths

	Clamping length X diameter D1					
	1,0	***1,5***	***2***	***2,5***	***3,0***	***Min. length****
Holder mm	Nm	Nm	Nm	Nm	Nm	mm
12	5	15	25	40	60	35
20	45	100	175	260	260	46.5
25	110	235	440	480	480	50.5
32	260	585	820	820	820	53.5

	Clamping length X diameter D1					
	1,0	***1,5***	***2***	***2,5***	***3,0***	***Min. length****
Holder inches	ft·lb	ft·lb	ft·lb	ft·lb	ft·lb	inch
1/2"	3.7	11	18	30	44	1.378
3/4"	33	74	129	192	192	1.831
1"	81	173	325	354	354	1.988
1 1/4"	192	431	605	605	605	2.106

Balancing:

All holders are dynamically balanced.
See corresponding product pages for details.

Runout:

All ETP holders are delivered with a high runout accuracy at time of delivery. The runout value is measured at 2.5 x D1.

See corresponding product pages for details.

Recommended tightening torque:

- **HYDRO-GRIP 6 Nm**
- **HYDRO-GRIP HD 10 Nm**
- **ECOGRIP 10 Nm**

Always use a torque wrench for best chuck performance and repeatability.

- **Torque too high**
  may cause screw damage.
- **Torque too low**
  may cause tool vibration, tool movement, affects surface and tool accuracy, balancing.

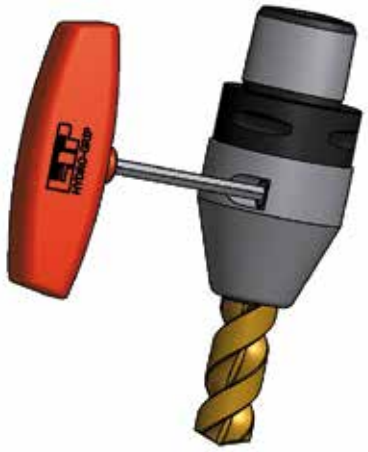

Handling:

ETP HYDRO-GRIP and ETP ECOGRIP are high precision toolholders and should be handled with care for optimal performance.

- **Before inserting tool, check for damages on tool and holder.**
- **Tools should be of correct dimension and tolerance (h6 or h7), and cleaned.**
- **Do not use force to insert tool, it should easily slide in position.**
- **Mount the tool by tightening the pressure screw to the recommended tightening torque, marked on the holder. Use a fixed torque wrench.**
- **When stored lubricate the holder with a thin oil for corrosion resistance.**
- **Do not use HYDRO-GRIP/ECOGRIP at working temperatures above 85 degrees C / 185 degrees F.**
  Do not use HYDRO-GRIP HD at working temperatures above 70 degrees C / 158 degrees F.
  (This may increase the pressure in the holder and influence it negatively).

More Hydraulic
high precision clamping units

SCAN ME

2025-06

ETP Transmission AB

Box 1120, SE-581 11 Linköping, Sweden
Tel. +46 (0)13 24 71 00
E-mail: info@etp.se, Internet: www.etp.se